866.652.2100

visionary™ DESIGNS

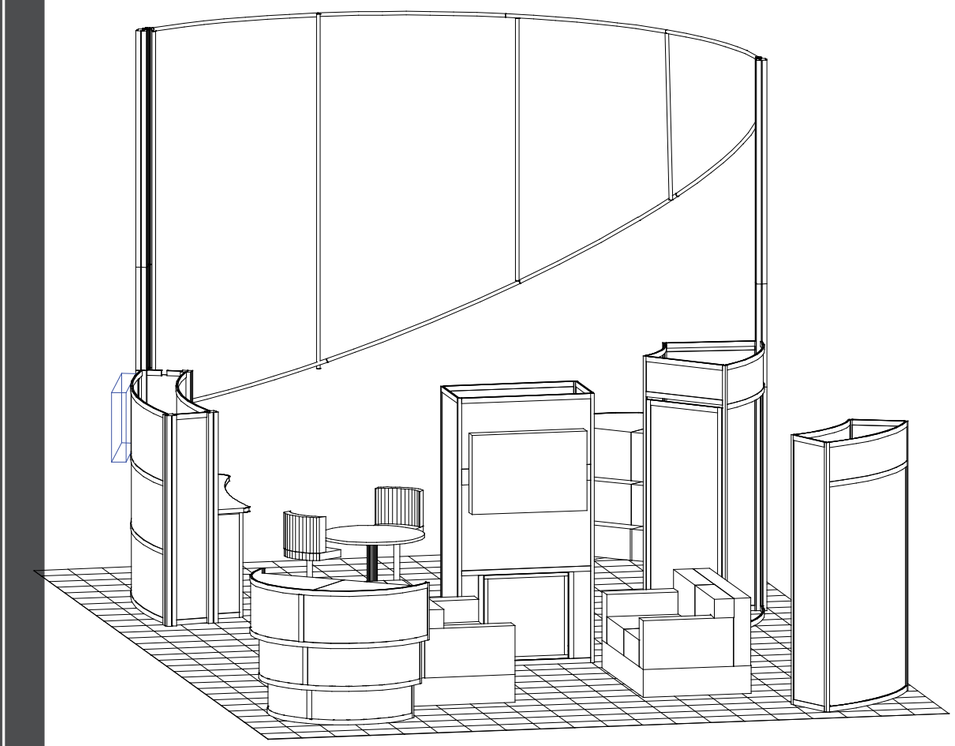

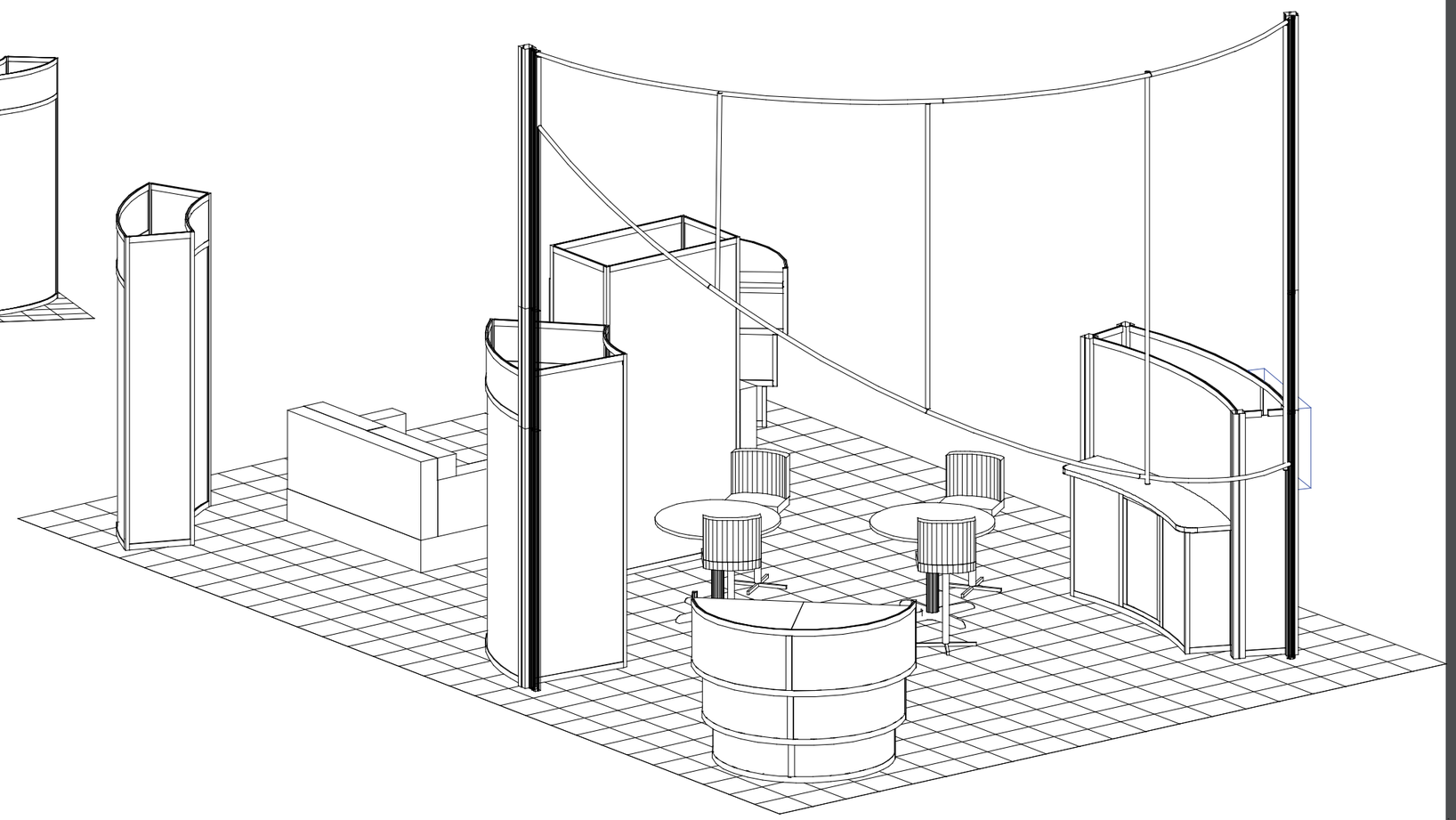

WHEN DISASSEMBLING ALUMINUM EXTRUSION, TIGHTEN ALL SETSCREWS AND LOCKS TO PREVENT LOSS DURING SHIPPING

© 2011

Order #32955 - Closet Section Layout

866.652.2100

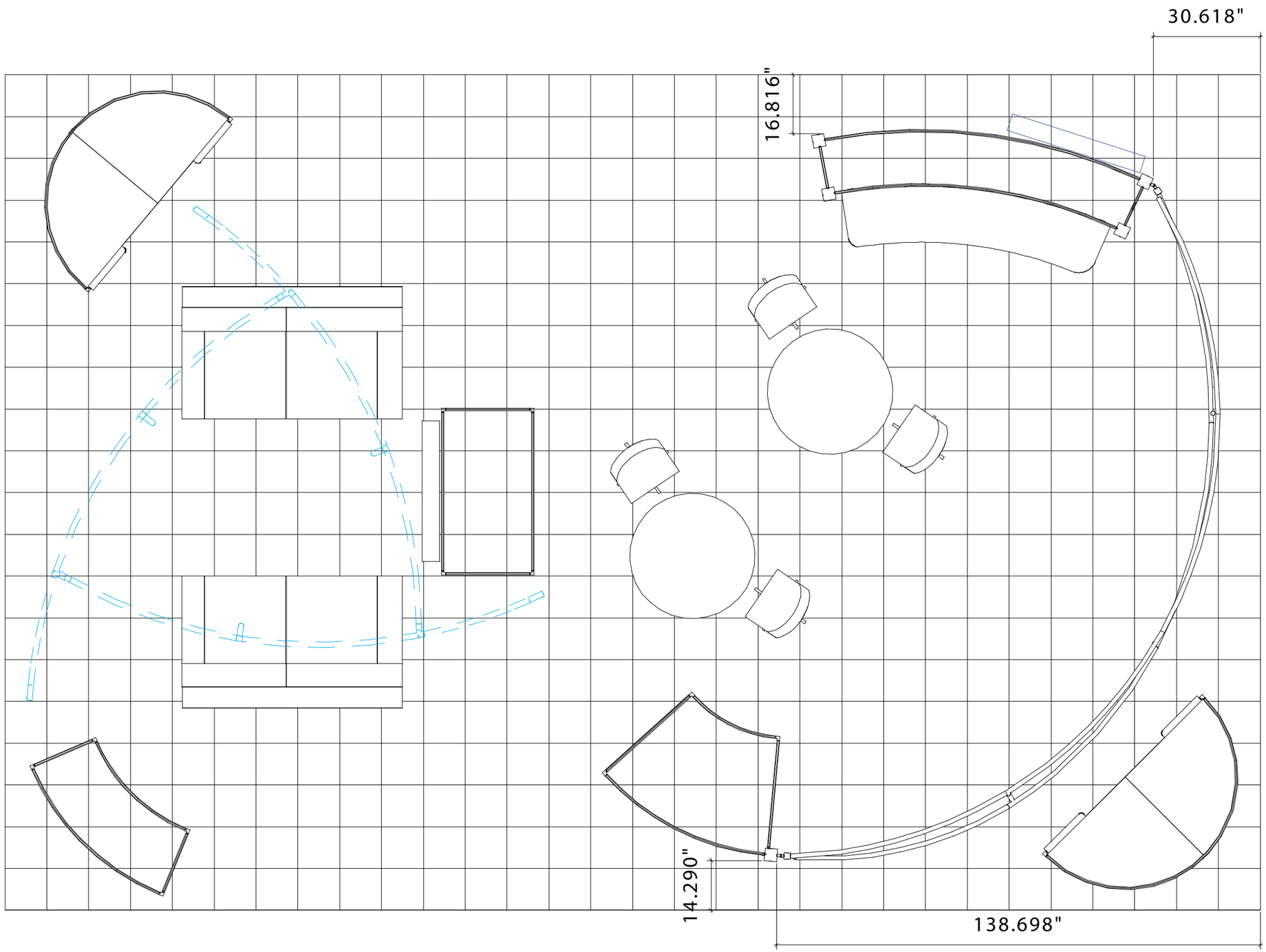

WHEN DISASSEMBLING ALUMINUM EXTRUSION, TIGHTEN ALL SETSCREWS AND LOCKS TO PREVENT LOSS DURING SHIPPING

© 2011

866.652.2100

visionary™ DESIGNS

Using Your Setup Instructions

The Visionary Designs Setup Instructions are created specifically for your configuration. They are laid out sequentially, including an exploded view of the entire display, and then a logical series of detailed steps to assemble the main structure and components. We encourage you to study the instructions **before** attempting to assemble your exhibit.

Each page reminds you to tighten the setscrews after disassembling your exhibit to prevent loss of the locks and setscrews (see below in RED). This is VERY IMPORTANT.

Cleaning and Packing Your Display

1) Use care when cleaning aluminum extrusion or acrylic inserts. Use only non-abrasive cleaners.
2) When cleaning laminate inserts or countertops, use mild cleansers and a soft material such as cotton.
3) Keep all display components away from extreme heat and long exposure to sunlight to avoid warping and fading.
4) Retain all packing material. It will make re-packing much easier and will reduce the likelihood of shipping damage.

The Tool

Most Visionary Designs exhibits can be assembled with the supplied Hex Key Tool. Occasionally, a flat head screwdriver may be required.

Detail A

Typical Connection

Typical Connection (cont'd)

Most horizontal extrusion connections have a patented expandable lock. This lock inserts into the groove of an opposing extrusion. Tightening the lock with the Hex Key Tool expands the lock and creates a strong positive connection.

Detail B

Numbered Label

Each extrusion contains a numbered label which corresponds with setup instructions.
The label is located within a groove of the extrusion (when possible). With Visionary Designs the labels contain Black numbers unless otherwise specified.

Detail C

Horizontal Inline Connection (remove only one setscrew)

Remove only (1) setscrew when disassembling. Replace setscrew in extrusion after assembling it. Before packing, replace setscrew in extrusion to avoid losing it.

Detail D

Base Plate Connection

Attach base plate to round or square vertical extrusion using the bolt provided. Be careful not to strip the threads.

Detail E

Vertical Connection
(remove only two setscrews)

When vertical extrusions are packed in portable cases rather than crates or tubs, they must broken down into smaller sections which then require assembly.

Remove only (2) setscrews when disassembling. Replace setscrews in extrusion after assembling it. Before packing, replace setscrews in extrusion to avoid losing them.

WHEN DISASSEMBLING ALUMINUM EXTRUSION, TIGHTEN ALL SETSCREWS AND LOCKS TO PREVENT LOSS DURING SHIPPING

© 2011

866.652.2100

Part Number	Qty for Step	Description
1	1	94”h Vertical Extrusion
	1	30”h Vertical Extrusion
2	1	62”h Vertical Extrusion
3	1	94”h 90° Connection Extrusion
4	1	94”h 90° Connection Extrusion
5	1	94”h 90° Connection Extrusion
6	2	30.652” Extrusion
7/7A/7B	1/1/1	52.2738” Curved Extrusion
8/8A	1/1	27.1234" Curved Extrusion
9	2	32” Extrusion

Steps

1) Connect vertical extrusions together [1, 2 and additional 3’h extrusion].
2) Attach lower horizontal extrusions [6, 7, and 8] between vertical extrusions [1/2, 3, 4, and 5].
3) Connect horizontal extrusion [7A] resting atop attached vertical extrusion in vertical [1] and tighten in place.
4) Place large insert A and conference door as shown refering to door attachment detail.
5) Connect horizontal extrusion [9 and 6] above conferenc door and large insert as shown.
6) Place small insert B and graphic insert as shown.
7) Connect remaining extrusions [6, 7B, 8A, and 9].
8) Attach graphics to backsides of [8, 8A, and 7, 7A] by attaching Velcro graphic to Velcro on extrusions.

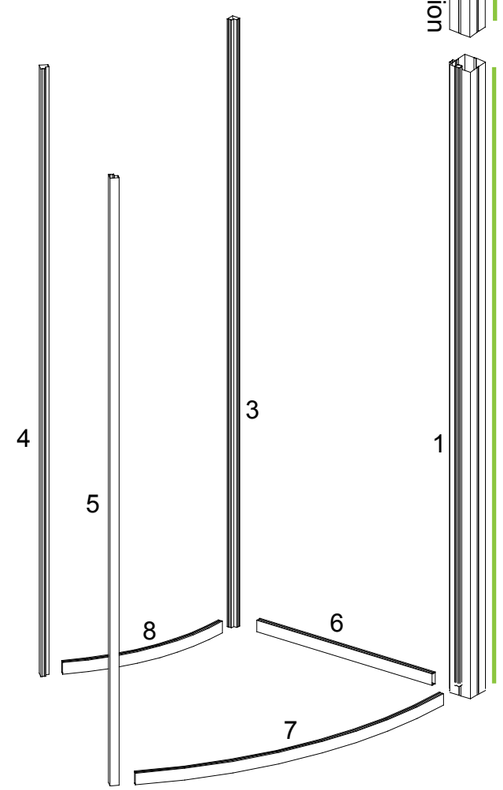

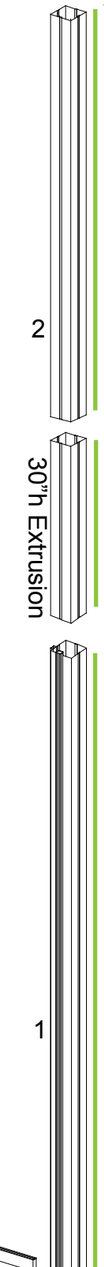

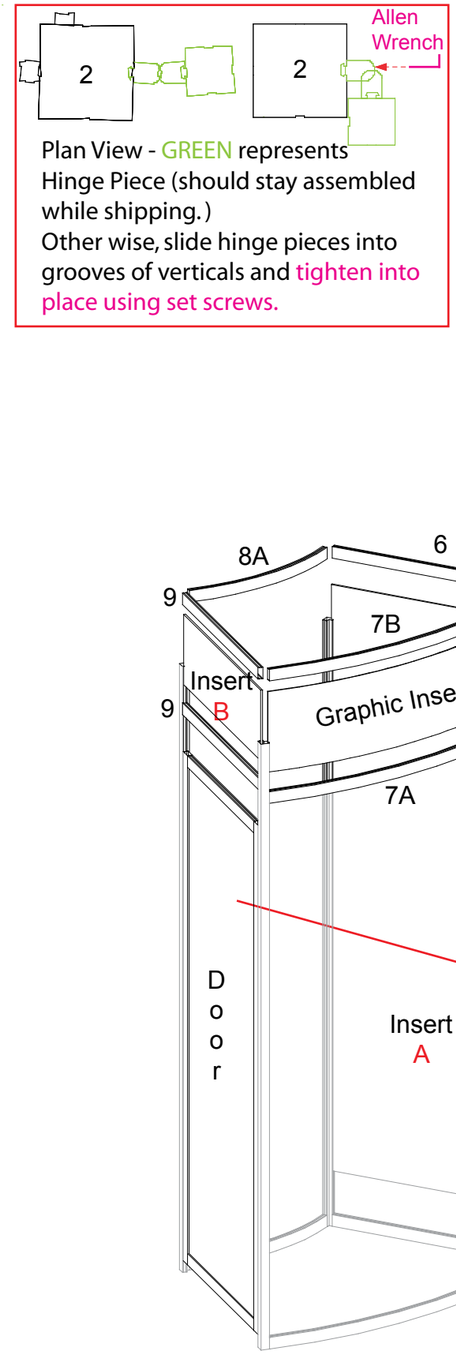

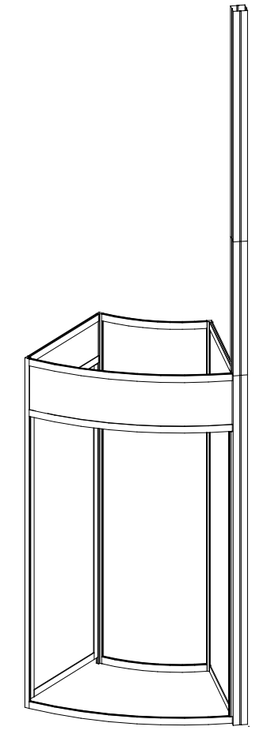

Door Attachment

Slide pin into hinge attached to vertical. Slide door hinge atop pin.

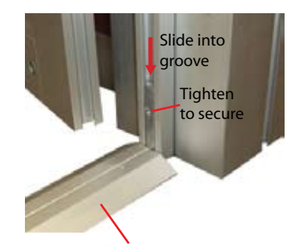

WHEN DISASSEMBLING ALUMINUM EXTRUSION, TIGHTEN ALL SETSCREWS AND LOCKS TO PREVENT LOSS DURING SHIPPING

© 2011

866.652.2100

Part Number	Qty for Step	Description
10	4	94”h 90° Connection Extrusion
11	4	18” Extrusion
12	2	36.9798" Curved Extrusion
13	1	52.3275" Curved Extrusion
16	1	52.3275" Curved Extrusion
17	1	52.3275" Curved Extrusion

Steps

1) Connect lower horizontal extrusions [12, and 13] between assembled side sections as shown.
2) Connect curved horizontal extrusion [16] loosely between vertical extrusions [10], place Graphic Insert into place and curved horizontal extrusion [17] tightening both extrusions in place allowing horizontal extrusion [17] flush with the top of the vertical extrusions [10].
3) Connect horizontal extrusion [12] between vertical extrusions [10].

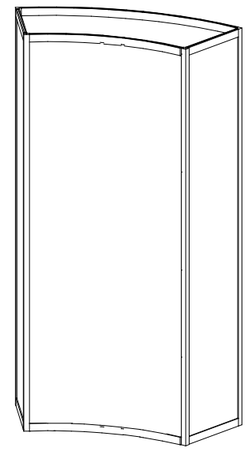

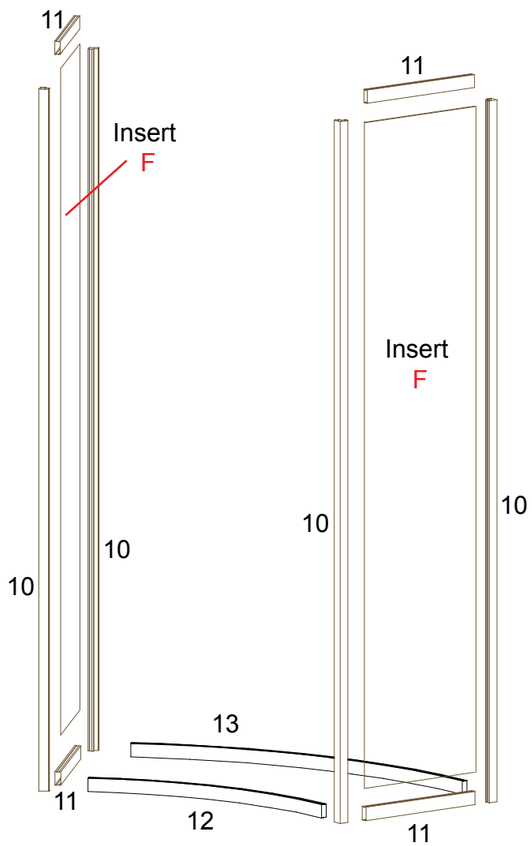

NOTE: Sections highlighted in brown should remain assembled when shipping

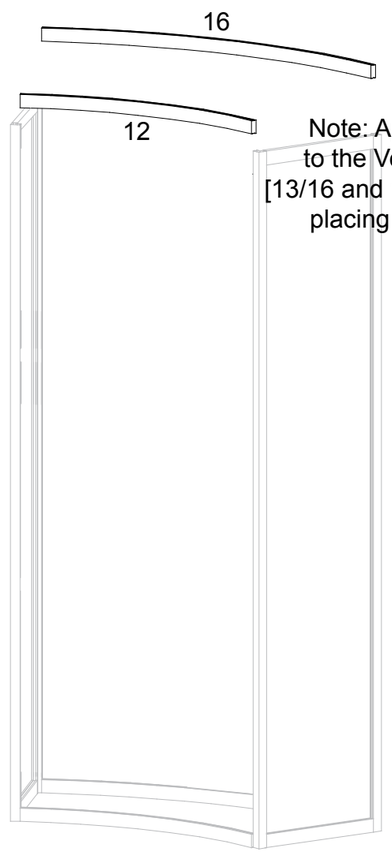

Note: Apply fabric graphic to the Velcro on extrusions [13/16 and 12] at this step before placing final large inserts.

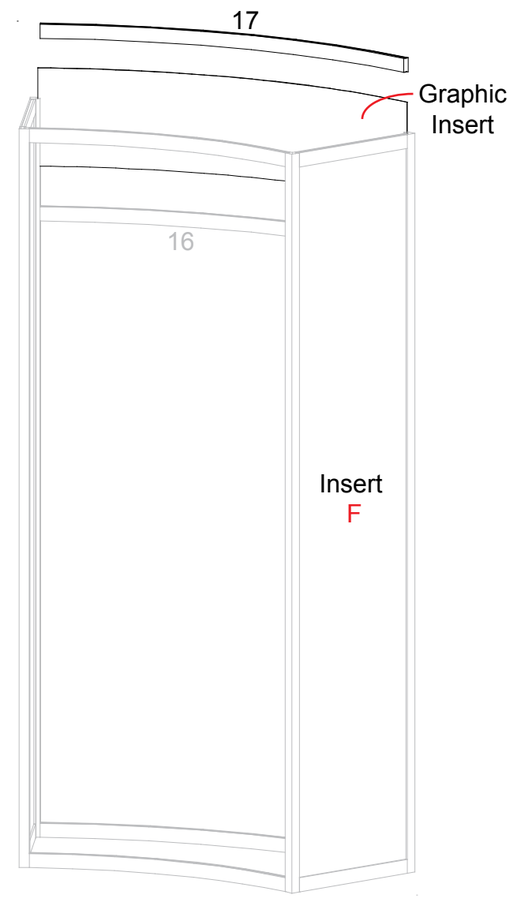

WHEN DISASSEMBLING ALUMINUM EXTRUSION, TIGHTEN ALL SETSCREWS AND LOCKS TO PREVENT LOSS DURING SHIPPING

© 2011

866.652.2100

Part Number	Qty for Step	Description
20	1	78"h Square Extrusion
21	1	78"h Square Extrusion
	1	30"h Extrusion
22	3	73.5"h Square Extrusion
23	1	92.6125" Lower Curved Horizontal
24	1	82.9215" Lower Curved Horizontal
25	2	12" Extrusion
25A	2	5.5" Extrusion w/ Cap
27A	2	92.6125" Lower Formed Horizontal
32	1	92.6125" Lower Curved Horizontal with Connector for Extrusion Attachment
40	2	22.112" Extrusion for Monitor Mount

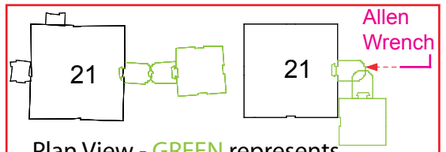

Plan View - GREEN represents Hinge Piece (should stay assembled while shipping.)
Other wise, slide hinge pieces into grooves of verticals and tighten into place using set screws.

Steps
1) Connect vertical extrusions [20, 21 and additional 30" extrusion] together as shown.
2) Connect horizontal extrusions [23, 24, and 25] between vertical extrusions [22 and 20].
3) Place lower insert G as shown, connecting curved horizontal [27A] atop insert, repeating with next insert G and P/P1 and extrusions [27 and 32] placing extrusions [40] between as shown.
4) Place insert L and connect small horizontal extrusions [25] atop insert L and to vertical extrusions [20 and 22].

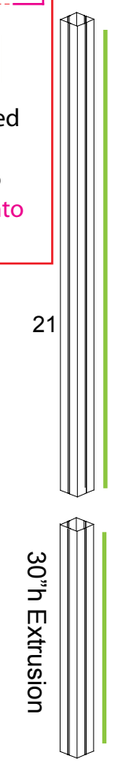

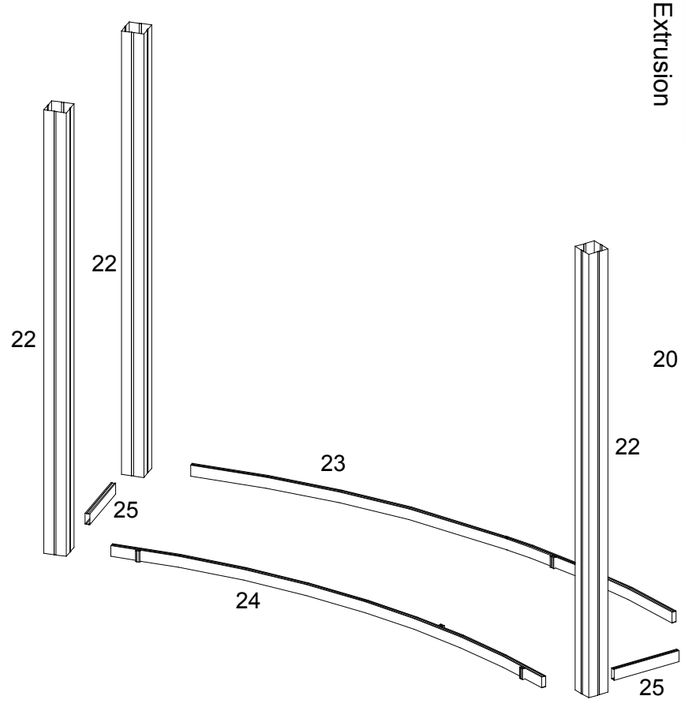

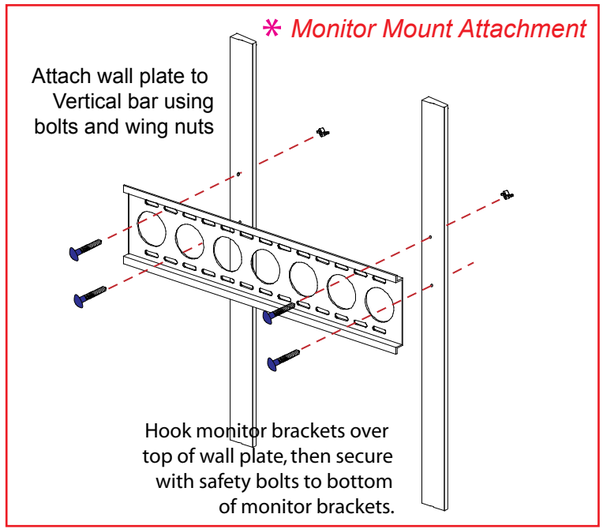

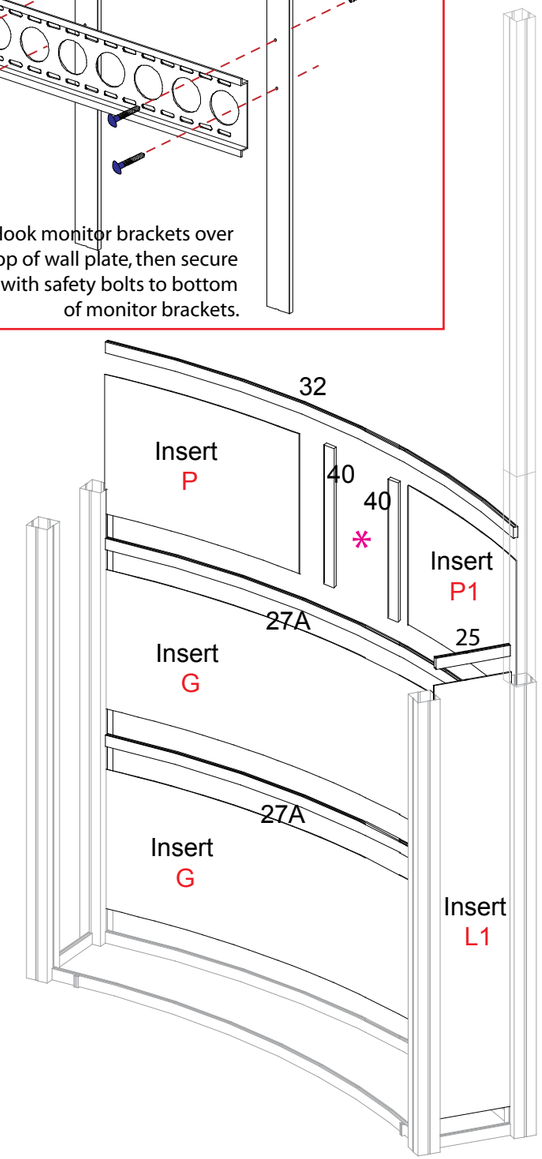

WHEN DISASSEMBLING ALUMINUM EXTRUSION, TIGHTEN ALL SETSCREWS AND LOCKS TO PREVENT LOSS DURING SHIPPING

© 2011

866.652.2100

Part Number	Qty for Step	Description
25	1	12" Extrusion
28	2	34.4180"h Vertical T-Extrusion
29	2	34.4180"h Vertical Extrusion
30	1	82.9215" Middle Curved Horizontal w/ Holes for Counter Attachment
31	1	82.9215" Upper Curved Horizontal

Steps

1) Connect vertical extrusions [28 and 29] to lower curved horizontal [24] from previous page placing inserts H and I as shown and tightening extrusions into place.
2) Connect curved horizontal [30] atop inserts, extrusions [28 and 29] and between vertical extrusions [22].
3) Place inserts J as shown.
4) Connect upper curved extrusion [31] atop insert and between vertical extrusions [22].
5) Place insert M as shown and connect horizontal extrusion [25] atop insert and between vertical extrusions [22].

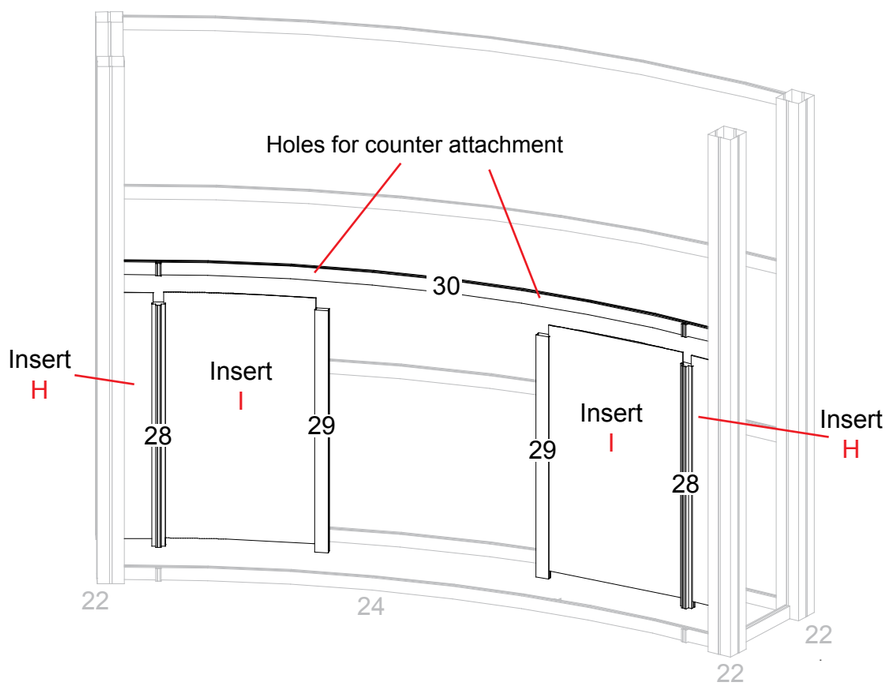

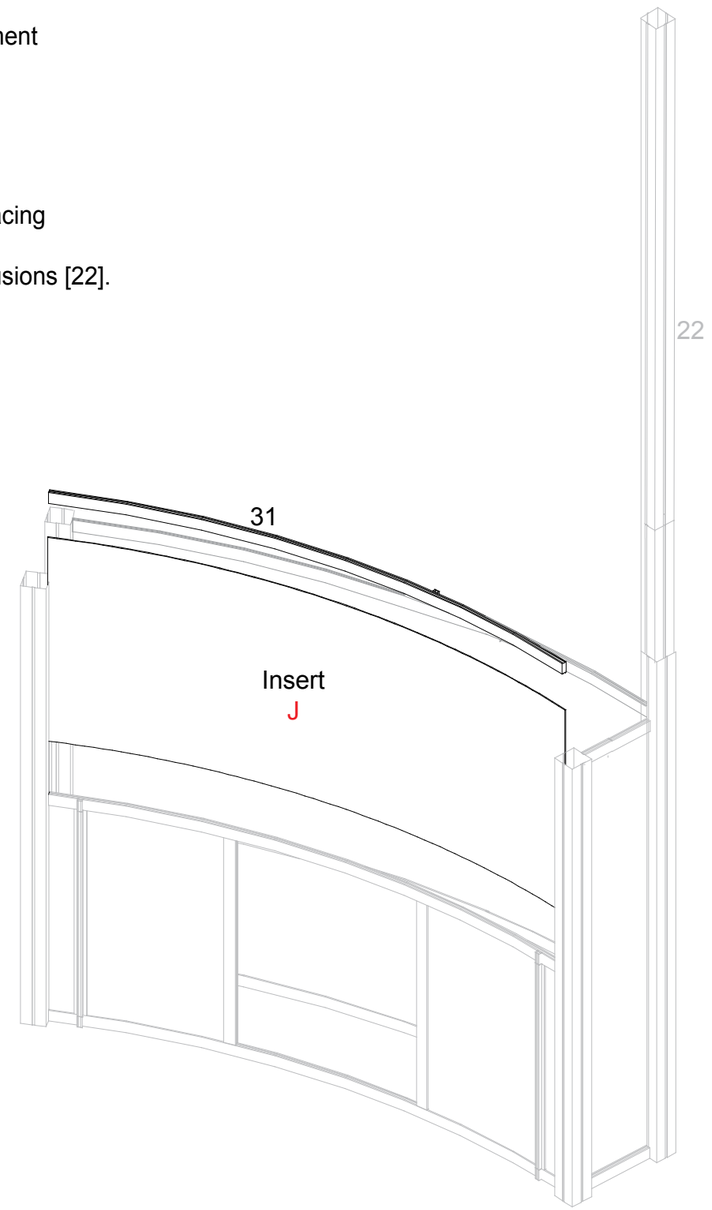

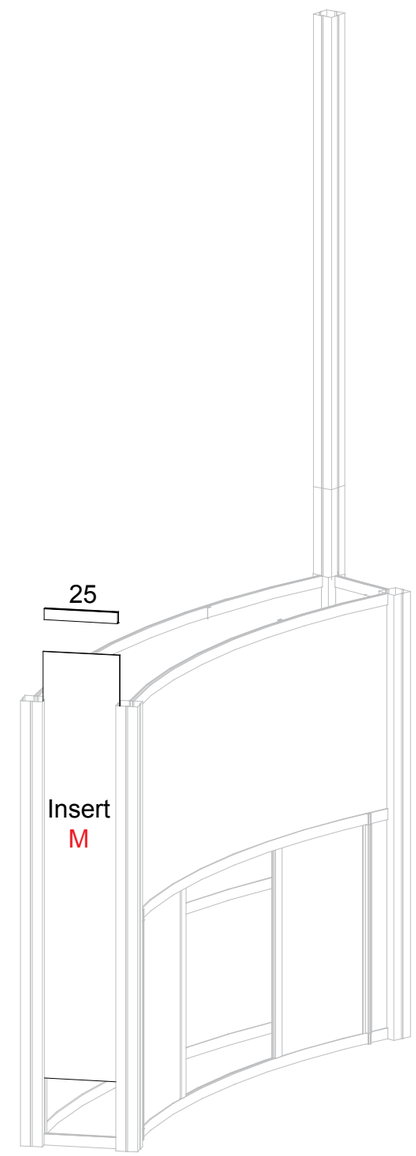

WHEN DISASSEMBLING ALUMINUM EXTRUSION, TIGHTEN ALL SETSCREWS AND LOCKS TO PREVENT LOSS DURING SHIPPING

© 2011

866.652.2100

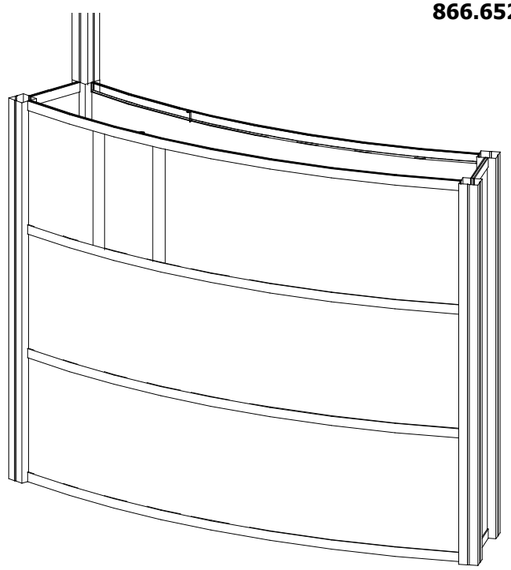

Part Number	Qty for Step	Description
33	4	12“ Extrusion
34	2	38”h Vertical 90° Extrusion
35	2	64.3015” Curved Horizontal
36	1	34.418" Vertical Extrusion
37	1	34.418" Vertical Extrusion

Steps

1) Connect horizontal extrusions [33] between vertical extrusions [34] and curved extrusion [24 (from previous pages)].
2) Connect curved horizontal [35] between vertical extrusions [34].
3) Connect vertical extrusions [36 and 37] loosely to curved horizontal extrusion [35].
4) Place inserts N and O between verticals [34, 36, and 37], tighten extrusion [36 and 37] in place before attaching door as shown in detail below.
5) Connect horizontal extrusions [33 and 35] atop inserts, door and between vertical extrusions [28 (from previous pages) and 34].
6) Place Counter atop assembled counter base and secure with thumbscrews to extrusion [30].

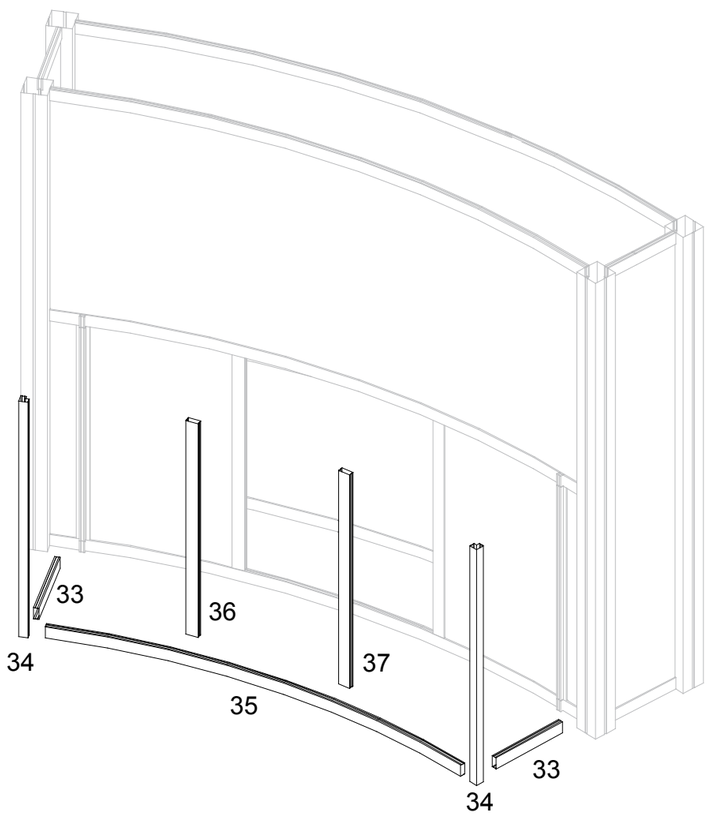

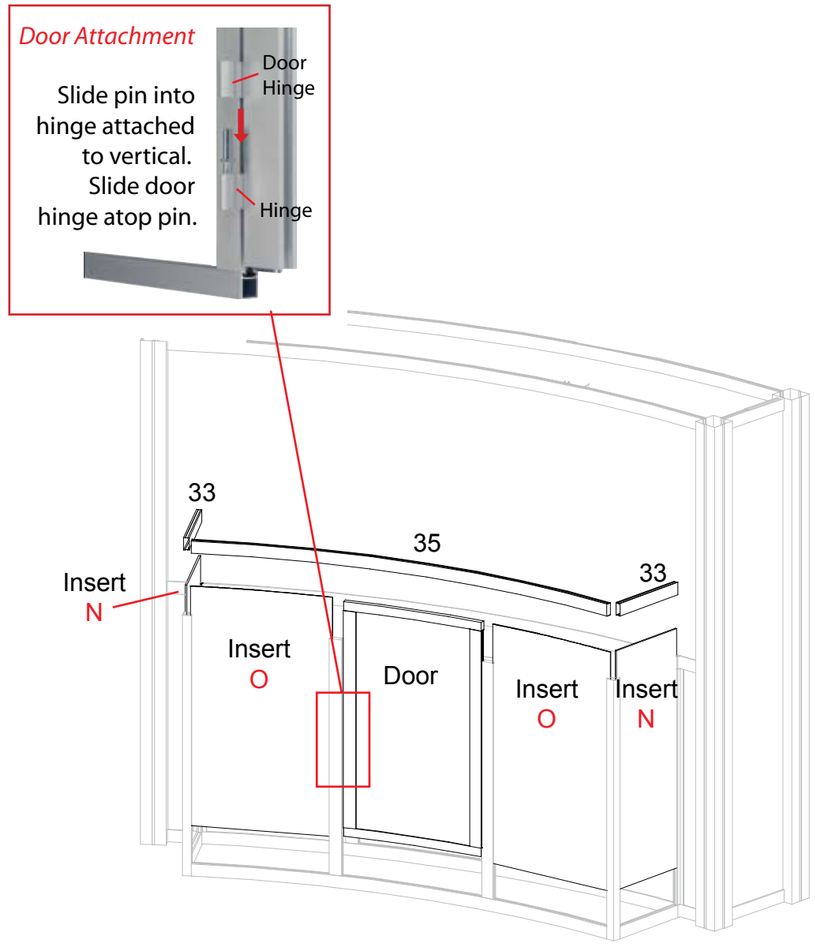

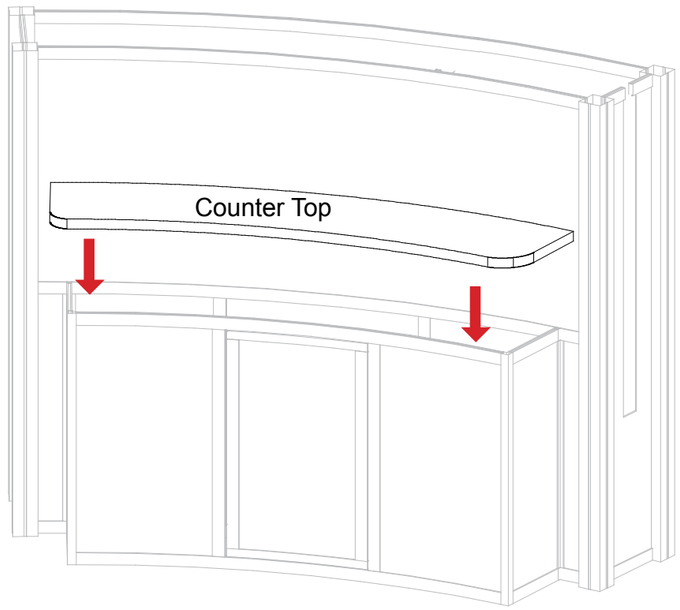

WHEN DISASSEMBLING ALUMINUM EXTRUSION, TIGHTEN ALL SETSCREWS AND LOCKS TO PREVENT LOSS DURING SHIPPING

© 2011

866.652.2100

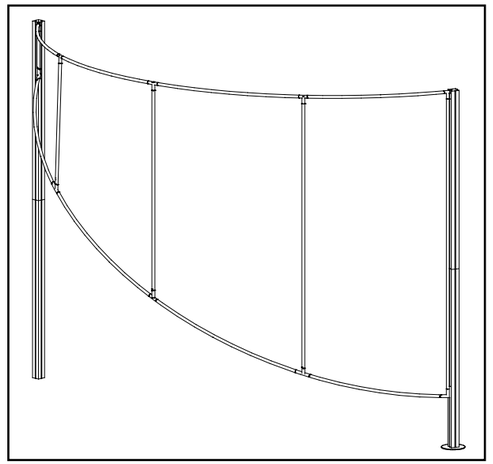

Using Your Setup Instructions

The Aero Overhead Sign Setup Instructions are created specifically for your configuration. They include an exploded view of the frame which is sequentially numbered. We encourage you to study the instructions before attempting to assemble your exhibit.

Connections are kept very simple: no tools. Everything assembles with push-button connectors and pre-connected horizontal sections.

Cleaning and Packing Your Display

1) Use care when cleaning aluminum extrusion or acrylic inserts. Use only non-abrasive cleaners.
2) Retain all packing material. It will make re-packing much easier and will reduce the likelihood of shipping damage.

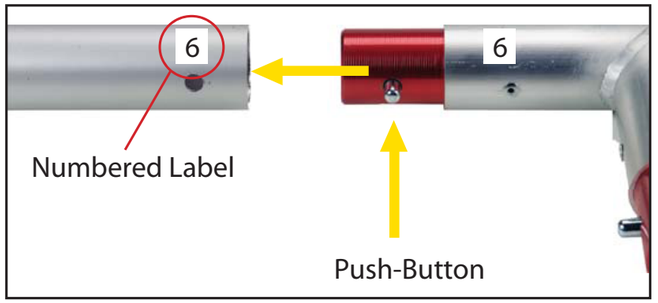

Connections are made by holding the button down and sliding the red tube into opposing tube until the connection is made. To disassemble push button and pull or twist extrusions apart.

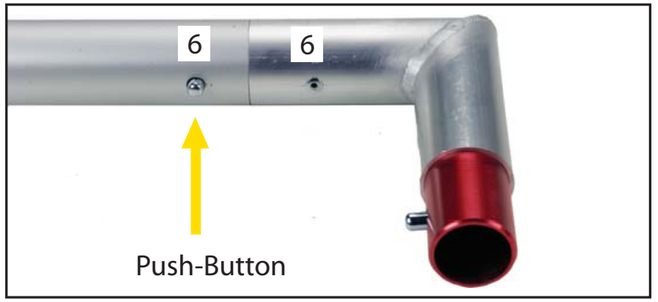

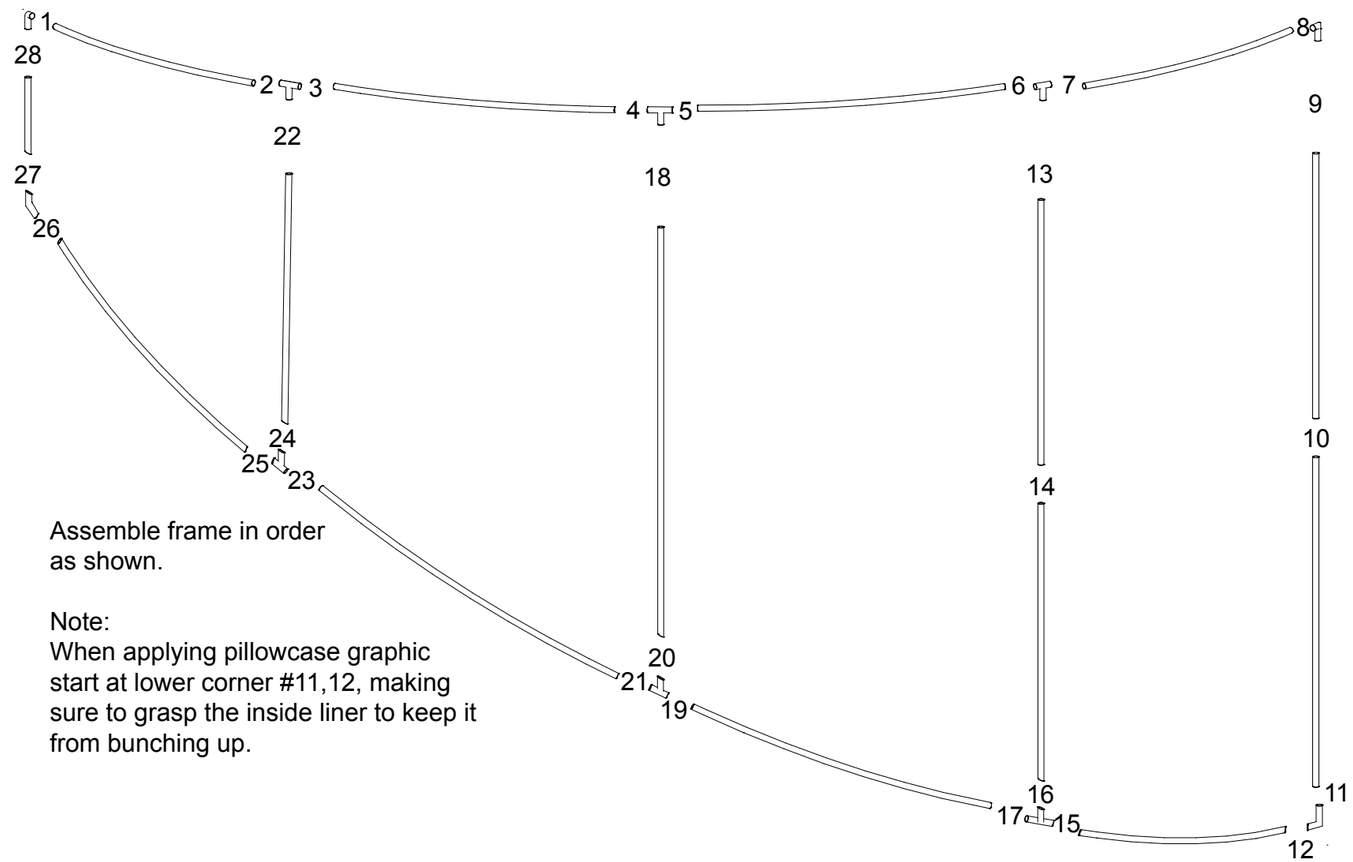

Assemble frame in order as shown.

Note:
When applying pillowcase graphic start at lower corner #11,12, making sure to grasp the inside liner to keep it from bunching up.

WHEN DISASSEMBLING ALUMINUM EXTRUSION, TIGHTEN ALL SETSCREWS AND LOCKS TO PREVENT LOSS DURING SHIPPING

© 2011

866.652.2100

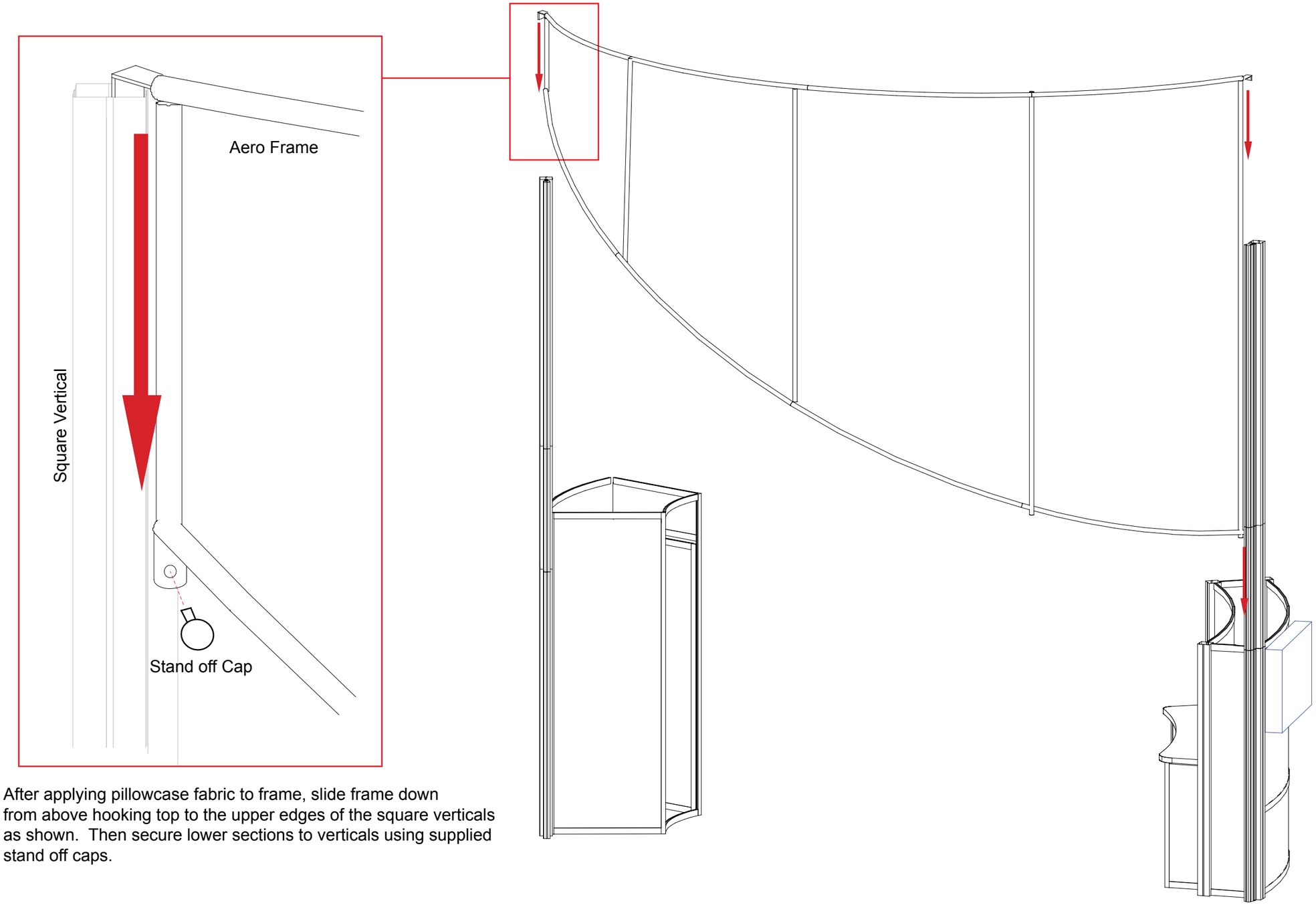

After applying pillowcase fabric to frame, slide frame down from above hooking top to the upper edges of the square verticals as shown. Then secure lower sections to verticals using supplied stand off caps.

WHEN DISASSEMBLING ALUMINUM EXTRUSION, TIGHTEN ALL SETSCREWS AND LOCKS TO PREVENT LOSS DURING SHIPPING

© 2011

866.652.2100

Part Number	Qty for Step	Description
41/41A	3/2	45.461”h Horizsontal Extrusion
42	2	30.209”h Vertical Extrusion w/Hinge
43	1	30.209”h Vertical Extrusion w/Stop
44	1	45.461”h Horizsontal Extrusion
45	4	25”h Horizontal Extrusion
46/46A	2/2	94”h 90° Vertical Extrusion

Steps

1) Connect horizontal extrusion [41 and 41A] between vertical assemblies [45/46/46A].
2) Attach vertical extrusions [42 and 43] loosely to horizontal [41] place inserts and door, then secure into place.
3) Connect horizontal extrusions [41 and 44] between vertical assemblies placing inserts as shown.
4) Connect upper horizotnal [41A] between assemblies and Flush to top of [46A].
5) Attach Graphc to Velcro.

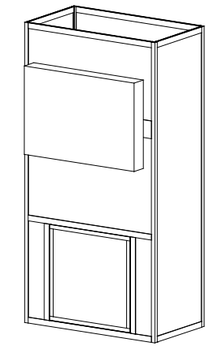

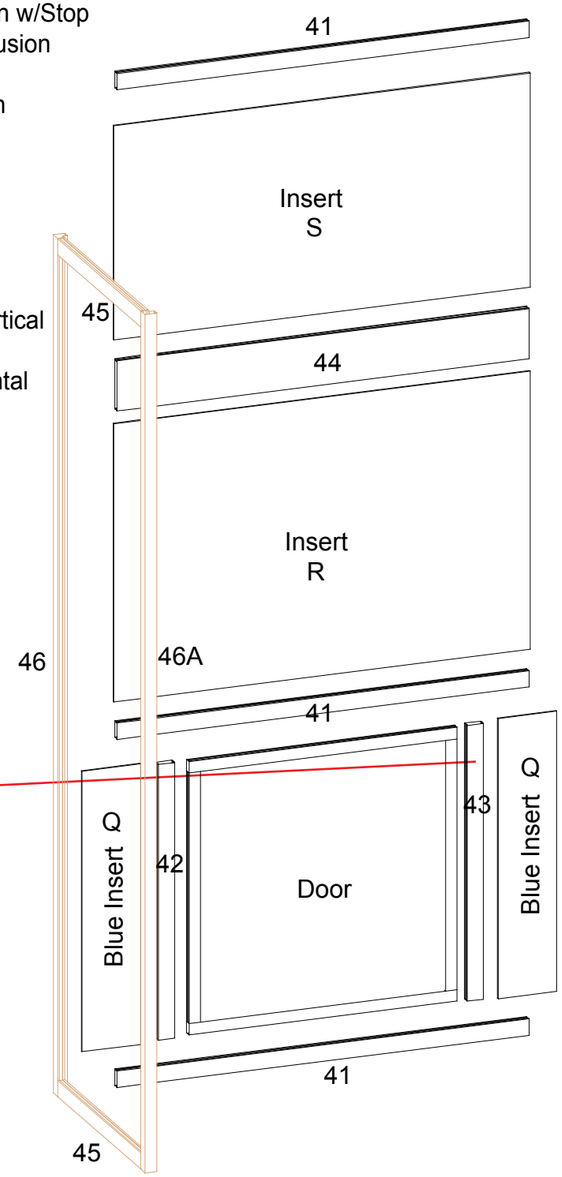

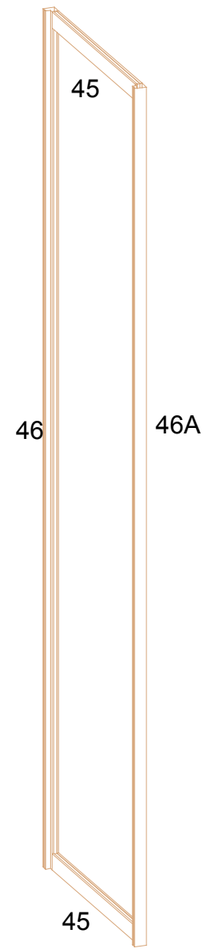

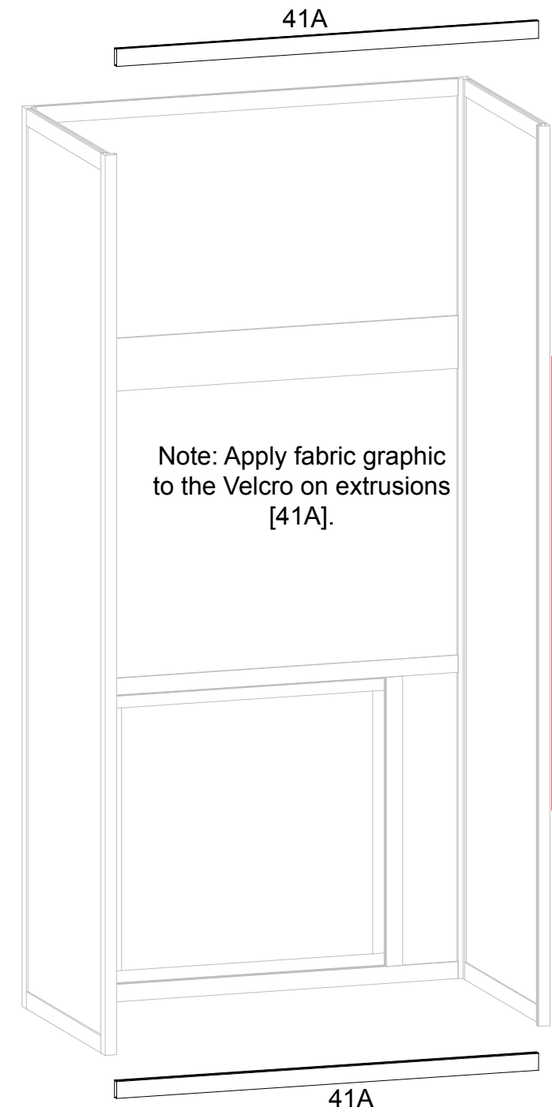

Example of Monitor Mount Attachment

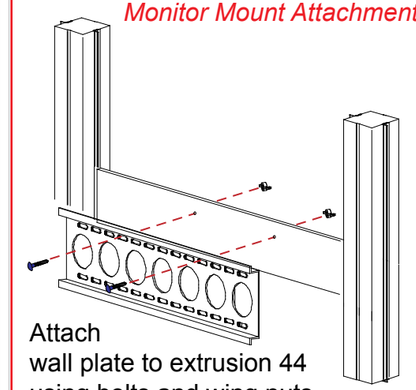

Attach
wall plate to extrusion 44
using bolts and wing nuts

Door Attachment

Slide pin into hinge attached to vertical. Slide door hinge atop pin.

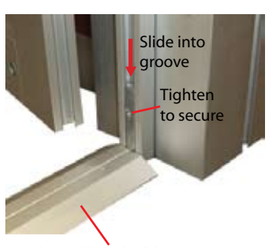

NOTE: Sections highlighted in brown should remain assembled when shipping

WHEN DISASSEMBLING ALUMINUM EXTRUSION, TIGHTEN ALL SETSCREWS AND LOCKS TO PREVENT LOSS DURING SHIPPING

© 2011

866.652.2100

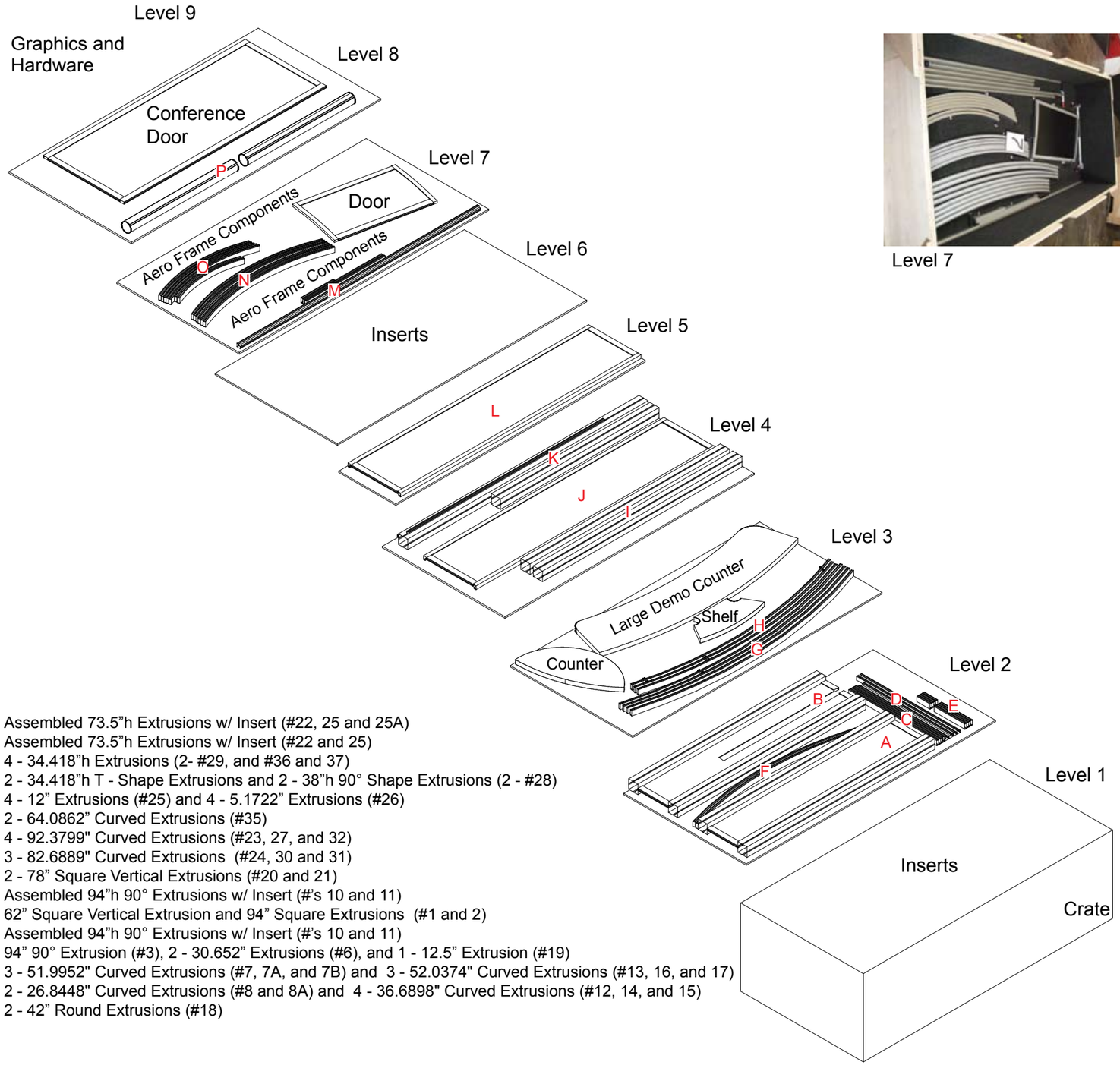

A Assembled 73.5”h Extrusions w/ Insert (#22, 25 and 25A)
B Assembled 73.5”h Extrusions w/ Insert (#22 and 25)
C 4 - 34.418”h Extrusions (2- #29, and #36 and 37)
D 2 - 34.418”h T - Shape Extrusions and 2 - 38”h 90° Shape Extrusions (2 - #28)
E 4 - 12” Extrusions (#25) and 4 - 5.1722” Extrusions (#26)
F 2 - 64.0862” Curved Extrusions (#35)
G 4 - 92.3799" Curved Extrusions (#23, 27, and 32)
H 3 - 82.6889" Curved Extrusions (#24, 30 and 31)
I 2 - 78” Square Vertical Extrusions (#20 and 21)
J Assembled 94”h 90° Extrusions w/ Insert (#’s 10 and 11)
K 62” Square Vertical Extrusion and 94” Square Extrusions (#1 and 2)
L Assembled 94”h 90° Extrusions w/ Insert (#’s 10 and 11)
M 94” 90° Extrusion (#3), 2 - 30.652” Extrusions (#6), and 1 - 12.5” Extrusion (#19)
N 3 - 51.9952" Curved Extrusions (#7, 7A, and 7B) and 3 - 52.0374" Curved Extrusions (#13, 16, and 17)
O 2 - 26.8448" Curved Extrusions (#8 and 8A) and 4 - 36.6898" Curved Extrusions (#12, 14, and 15)
P 2 - 42” Round Extrusions (#18)

Level 7

Level 8

Level 9

Level 5

Level 6

Level 3

Level 4

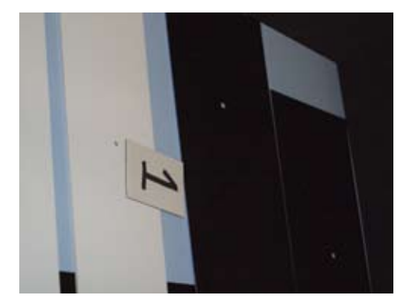
Level 1

Level 2

WHEN DISASSEMBLING ALUMINUM EXTRUSION, TIGHTEN ALL SETSCREWS AND LOCKS TO PREVENT LOSS DURING SHIPPING

© 2011

866.652.2100

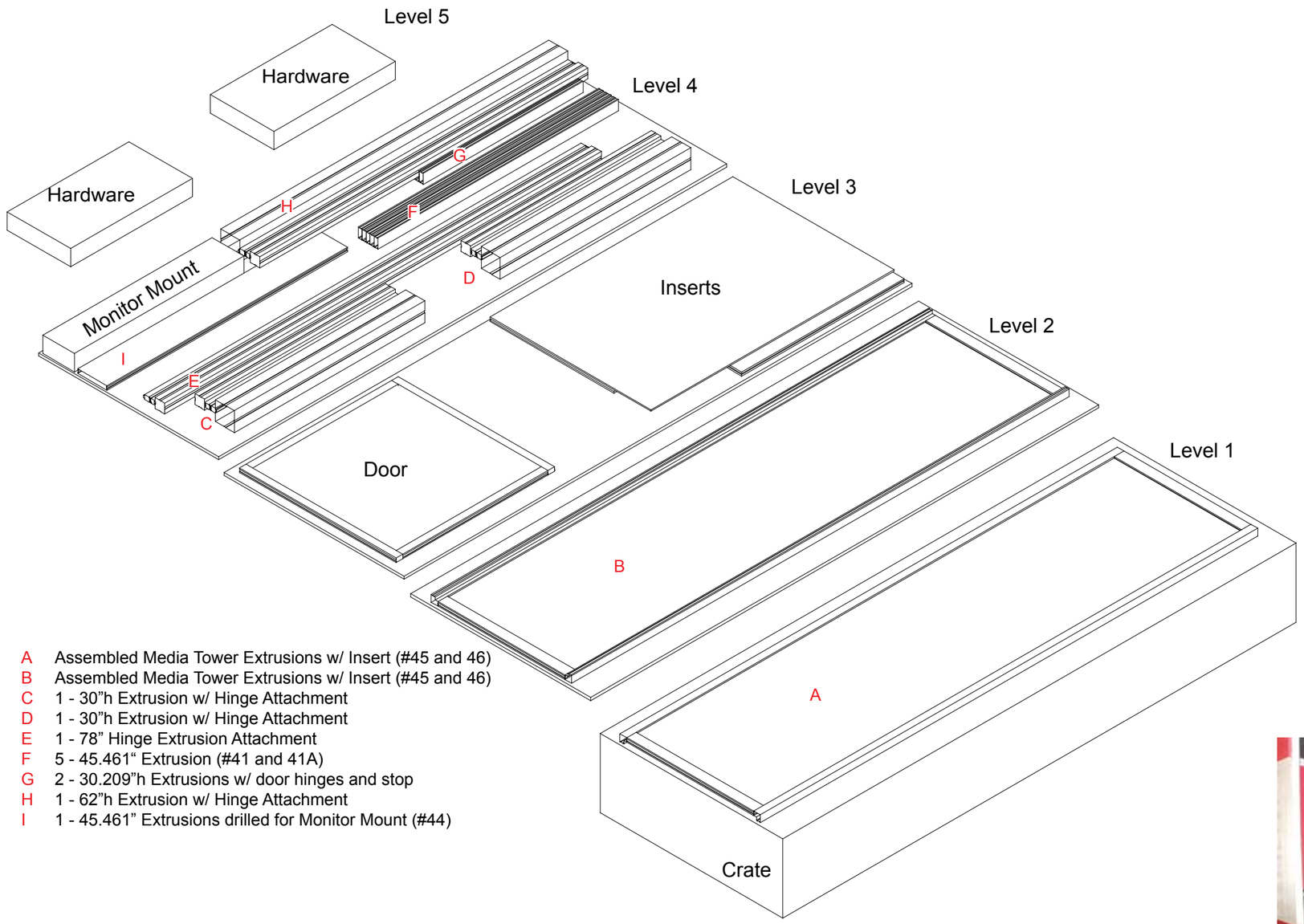

A Assembled Media Tower Extrusions w/ Insert (#45 and 46)
B Assembled Media Tower Extrusions w/ Insert (#45 and 46)
C 1 - 30”h Extrusion w/ Hinge Attachment
D 1 - 30”h Extrusion w/ Hinge Attachment
E 1 - 78” Hinge Extrusion Attachment
F 5 - 45.461“ Extrusion (#41 and 41A)
G 2 - 30.209”h Extrusions w/ door hinges and stop
H 1 - 62”h Extrusion w/ Hinge Attachment
I 1 - 45.461” Extrusions drilled for Monitor Mount (#44)

Level 5

Level 4

Level 3

Level 1

Level 2

WHEN DISASSEMBLING ALUMINUM EXTRUSION, TIGHTEN ALL SETSCREWS AND LOCKS TO PREVENT LOSS DURING SHIPPING

© 2011