euro lt

866.652.2100

Item Number	Description
1	19”w x 38”h Flat Panel w/ Connectors attached
2	19”w x 38”h Flat Panel w/ hinge
3	19”w x 38”h Flat Panel w/ hinge
4	19”w x 38”h Flat Panel w/ Connectors attached

Steps:
Connect panels together in numerical order as shown in illustrations.

Set counter atop assembled pedestal.

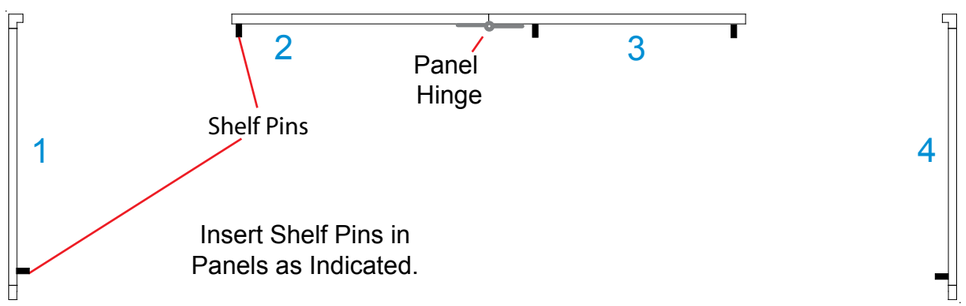

(NOTE: Remove Pins for packing or they may damage panel)

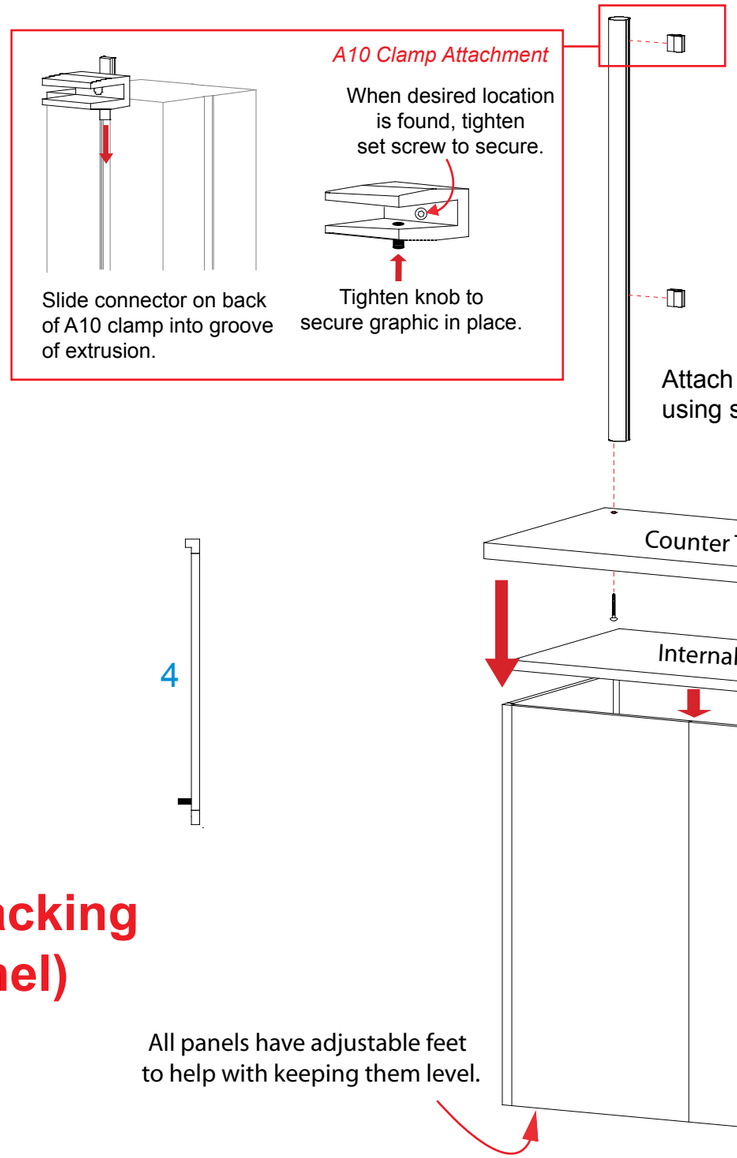

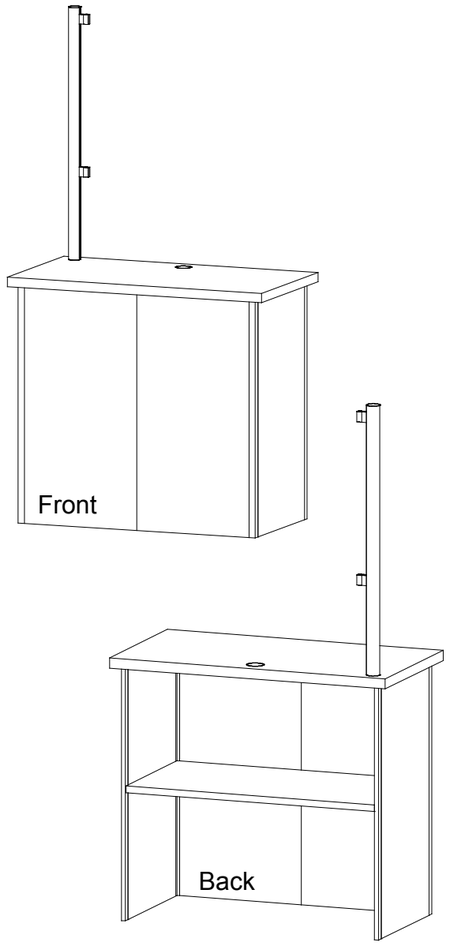

© 2010

866.652.2100

euro lt | HYBRIDS

Euro LT Hybrids General Setup Instructions

Using Your Setup Instructions

The Euro LT Hybrids Setup Instructions are created specifically for your configuration. They are laid out sequentially in levels, including exploded views, and a logical series of detailed steps to assemble the main structure and components. We encourage you to study the instructions **before** attempting to assemble your exhibit.

Cleaning and Packing Your Display

1) When cleaning laminate countertops or panels use mild cleansers and a soft material such as cotton.
2) Keep all display components away from extreme heat and long exposure to sunlight to avoid warping and fading.
3) Retain all packing material. It will make re-packing much easier and will reduce the likelihood of shipping damage.

Level 1 = Blue
Level 2 = Red
Level 3 = Green
Level 4 = Black

Color Code

The top clip is color coded to distinguish the level. The color coded clip also contains the numbered label

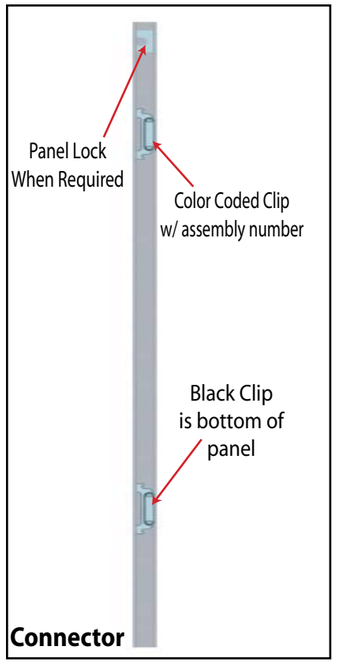

Connector

Each component has 2 clips, the lower clip is ALWAYS black. .

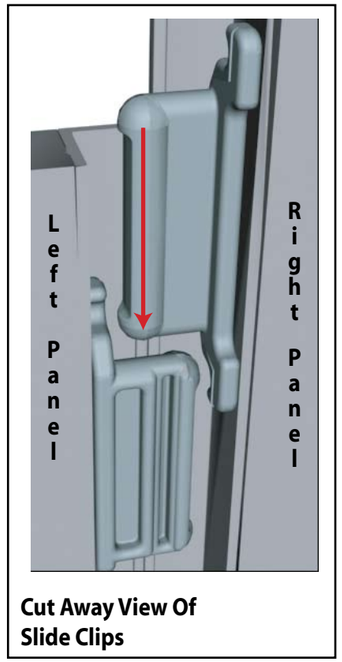

Cut Away View Of Slide Clips

Components connect together by aligning them and sliding downward connecting clips together.

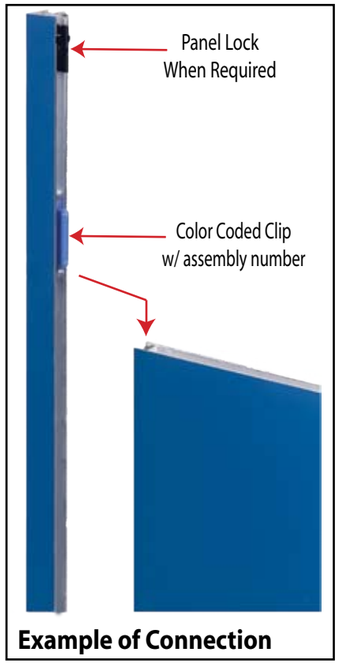

Example of Connection

Configurations are assembled from left to right, usually starting with #1 and following the numbered sequence.

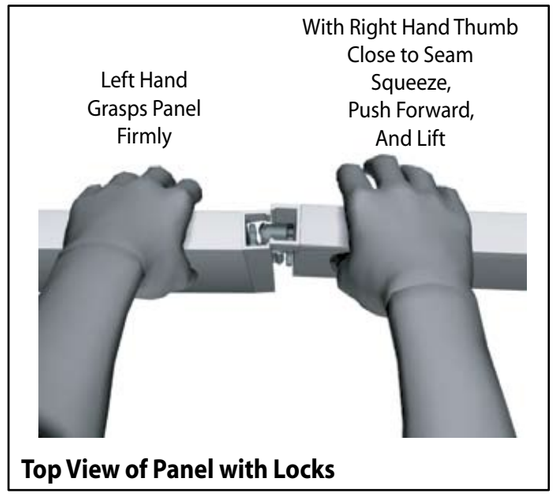

Top View of Panel with Locks

The first level of components contains panel locks that are located at the top of the panel for extra stability and a seamless connection. When dis-assembling panels, twist top connection slightly and lift right panel upward.

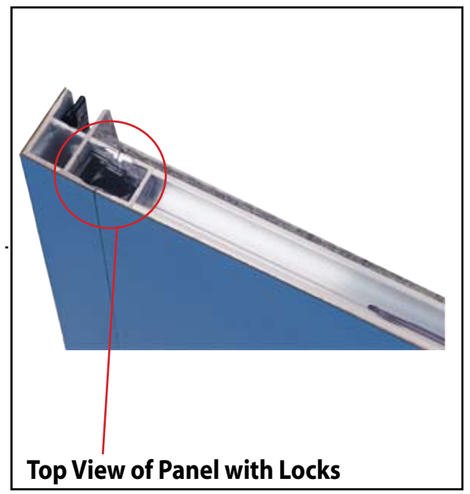

Top View of Panel with Locks

© 2010

866.652.2100

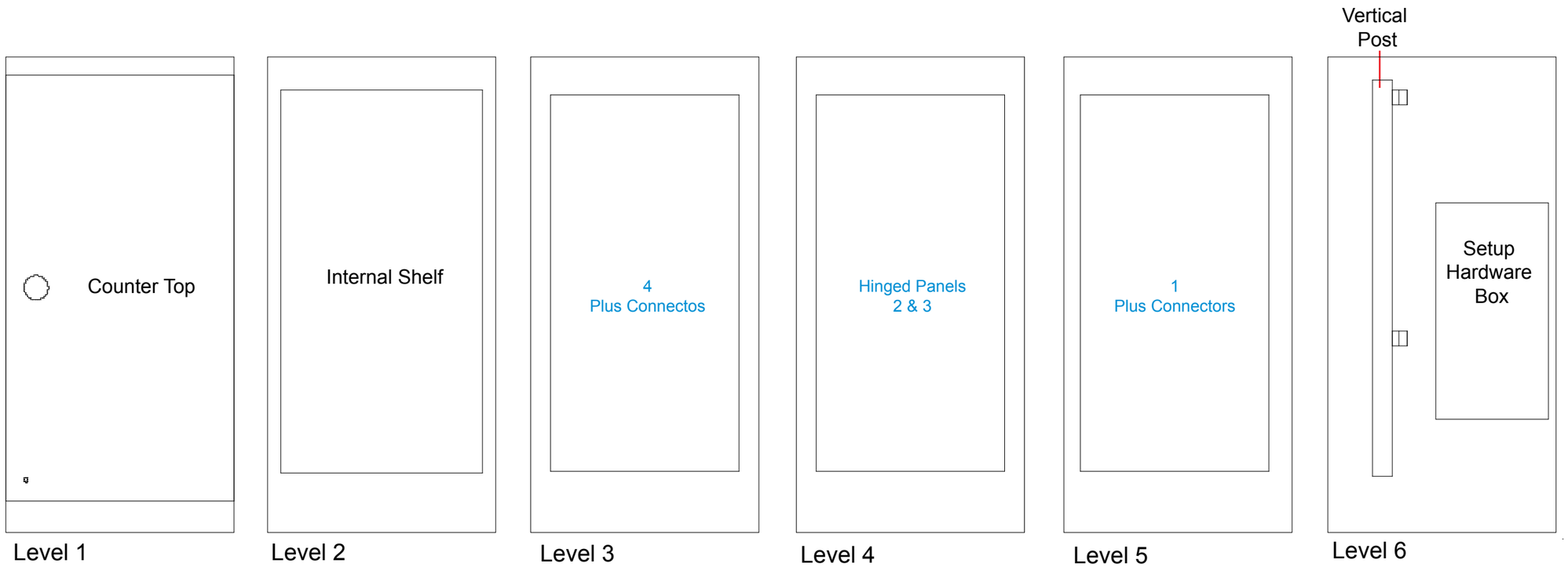

© 2010