866.652.2100

visionary™ DESIGNS

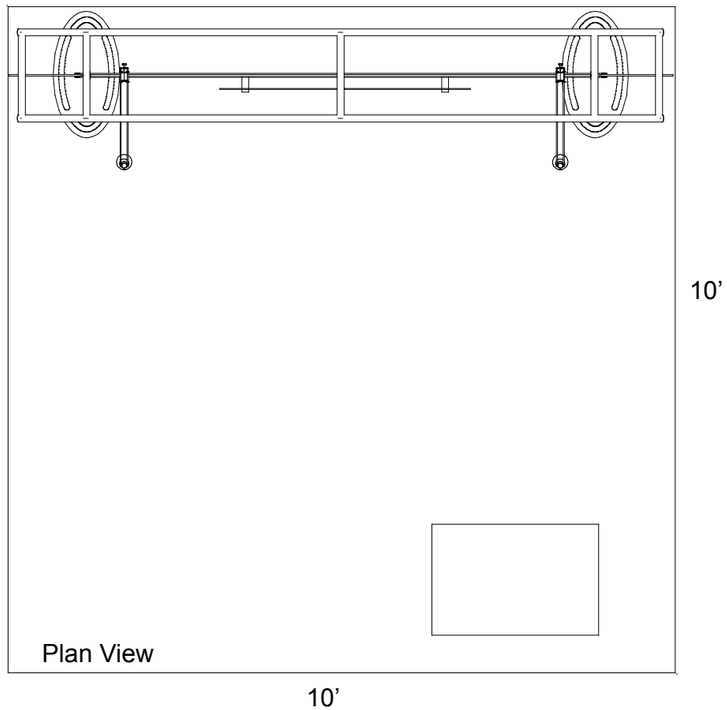

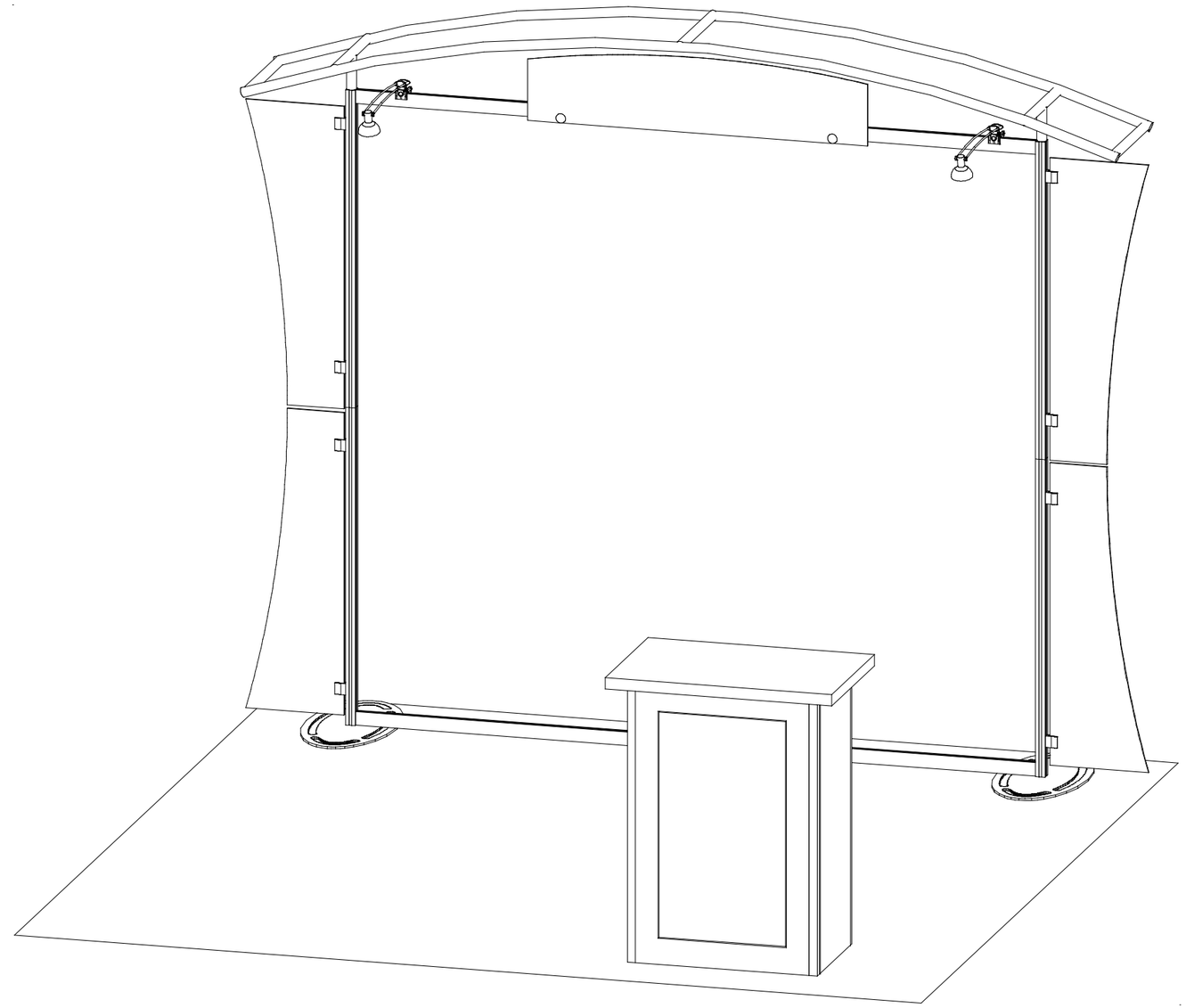

WHEN DISASSEMBLING ALUMINUM EXTRUSION, TIGHTEN ALL SETSCREWS AND LOCKS TO PREVENT LOSS DURING SHIPPING

© 2011

866.652.2100

visionary™ DESIGNS

Using Your Setup Instructions

The Visionary Designs Setup Instructions are created specifically for your configuration. They are laid out sequentially, including an exploded view of the entire display, and then a logical series of detailed steps to assemble the main structure and components. We encourage you to study the instructions **before** attempting to assemble your exhibit.

Each page reminds you to tighten the setscrews after disassembling your exhibit to prevent loss of the locks and setscrews (see below in RED). This is VERY IMPORTANT.

Cleaning and Packing Your Display

1) Use care when cleaning aluminum extrusion or acrylic inserts. Use only non-abrasive cleaners.
2) When cleaning laminate inserts or countertops, use mild cleansers and a soft material such as cotton.
3) Keep all display components away from extreme heat and long exposure to sunlight to avoid warping and fading.
4) Retain all packing material. It will make re-packing much easier and will reduce the likelihood of shipping damage.

The Tool

Most Visionary Designs exhibits can be assembled with the supplied Hex Key Tool. Occasionally, a flat head screwdriver may be required.

Detail A

Typical Connection

Typical Connection (cont'd)

Most horizontal extrusion connections have a patented expandable lock. This lock inserts into the groove of an opposing extrusion. Tightening the lock with the Hex Key Tool expands the lock and creates a strong positive connection.

Detail B

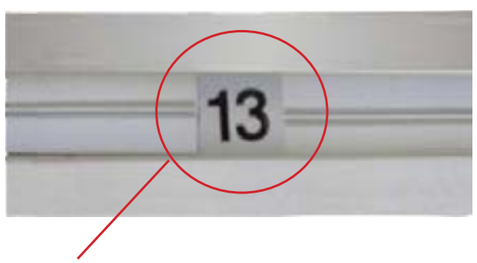

Numbered Label

Each extrusion contains a numbered label which corresponds with setup instructions.
The label is located within a groove of the extrusion (when possible). With Visionary Designs the labels contain Black numbers unless otherwise specified.

Detail C

Horizontal Inline Connection (remove only one setscrew)

Remove only (1) setscrew when disassembling. Replace setscrew in extrusion after assembling it. Before packing, replace setscrew in extrusion to avoid losing it.

Detail D

Base Plate Connection

Attach base plate to round or square vertical extrusion using the bolt provided. Be careful not to strip the threads.

Detail E

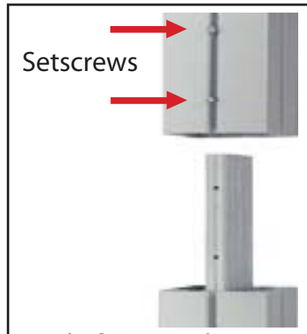

Vertical Connection
(remove only two setscrews)

When vertical extrusions are packed in portable cases rather than crates or tubs, they must broken down into smaller sections which then require assembly.

Remove only (2) setscrews when disassembling. Replace setscrews in extrusion after assembling it. Before packing, replace setscrews in extrusion to avoid losing them.

WHEN DISASSEMBLING ALUMINUM EXTRUSION, TIGHTEN ALL SETSCREWS AND LOCKS TO PREVENT LOSS DURING SHIPPING

© 2011

866.652.2100

Item	Qty.	Description
1	2	Base Plate
2	1	42”h Lower Square Vertical Extrusion
3	1	42”h Upper Square Vertical Extrusion
2a	1	42”h Lower Square Vertical Extrusion w/ A10 Clamps Attached
3a	1	42”h Upper Square Vertical Extrusion w/ A10 Clamps Attached
4a/4b	1/1	45”w Horizontal Extrusion
5a/5b	1/1	45”w Horizontal Extrusion

Steps:
1) Attach vertical extrusions [2 and 2a] to base plates [1].
2) Attach upper vertical extrusions [3 and 3a] to lower extrusions [2 and 2a] using connection bar [b].
3) Connect horizontal extrusions [4a to 4b and 5a to 5b] together using connection bar [a].
4) Attach horizontal assemblies [4a/4b and 5a/5b] between vertical assemblies as shown.
5) Apply graphic to back of assembled backwall.
6) Attach light to top of assembled backwall.

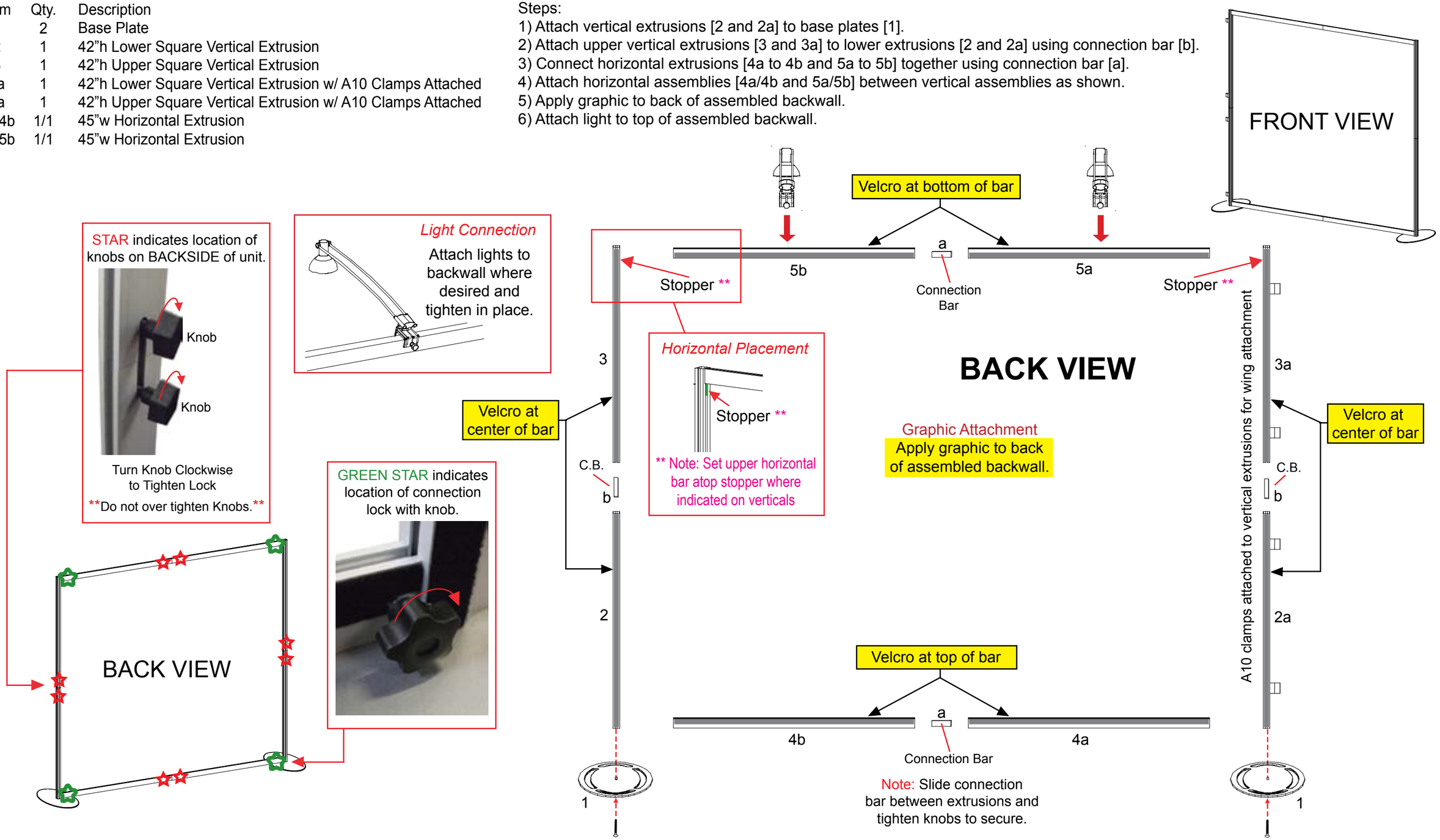

WHEN DISASSEMBLING ALUMINUM EXTRUSION, TIGHTEN ALL SETSCREWS AND LOCKS TO PREVENT LOSS DURING SHIPPING

© 2011

866.652.2100

ĀERO

Using Your Setup Instructions
The Aero Overhead Sign Setup Instructions are created specifically for your configuration. They include an exploded view of the frame which is sequentially numbered. We encourage you to study the instructions before attempting to assemble your exhibit.

Connections are kept very simple: no tools. Everything assembles with push-button connectors and pre-connected horizontal sections.

Cleaning and Packing Your Display
1) Use care when cleaning aluminum extrusion or acrylic inserts. Use only non-abrasive cleaners.
2) Retain all packing material. It will make re-packing much easier and will reduce the likelihood of shipping damage.

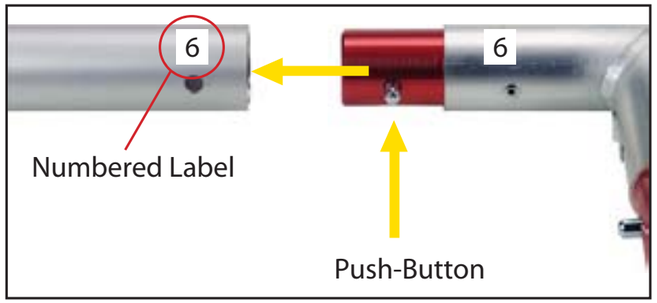

Connections are made by holding the button down and sliding the red tube into opposing tube until the connection is made. To disassemble push button and pull or twist extrusions apart.

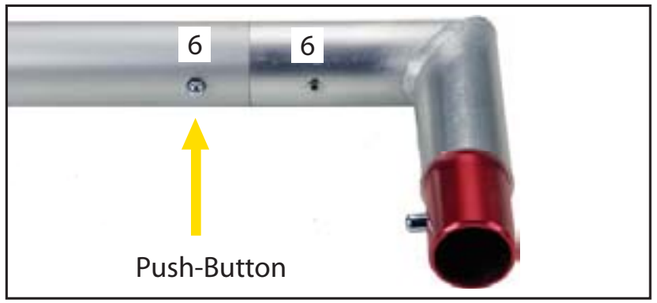

Steps:
1) Connect canopy pieces together as shown.
2) Apply pillow case graphic to assembled canopy

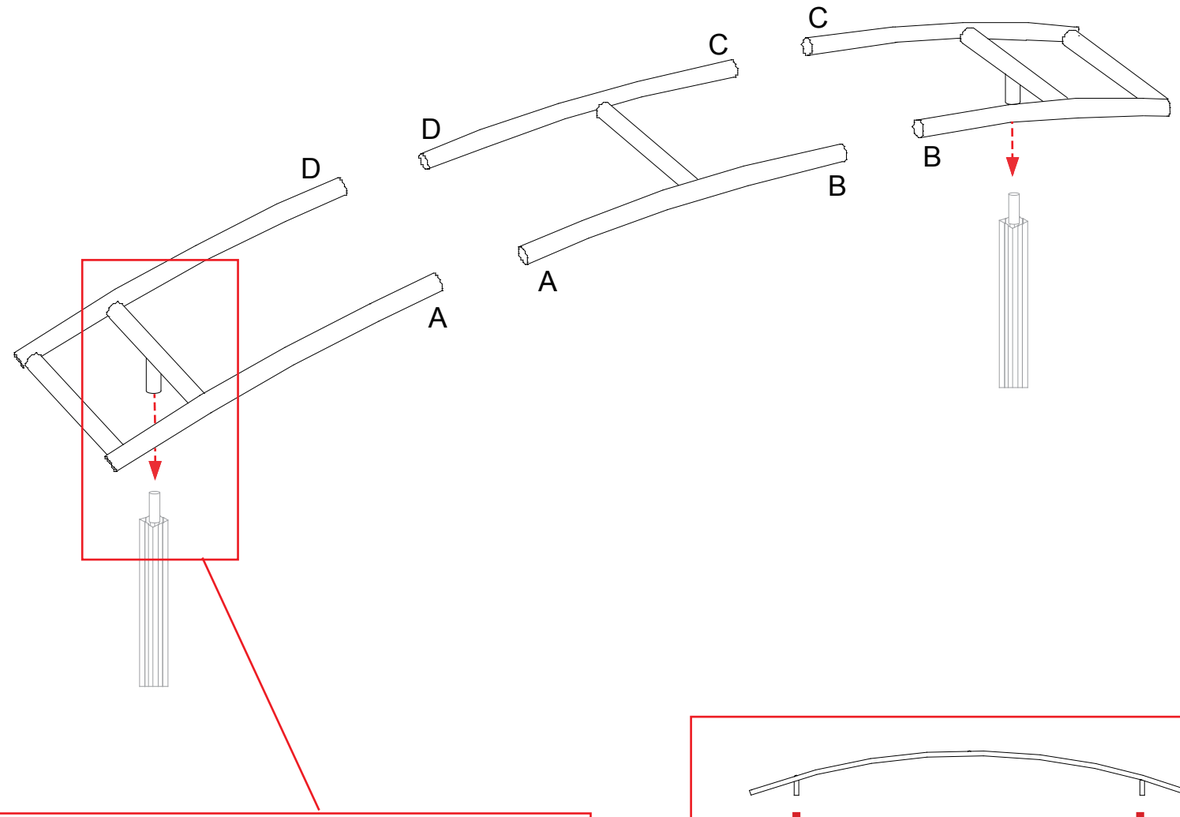

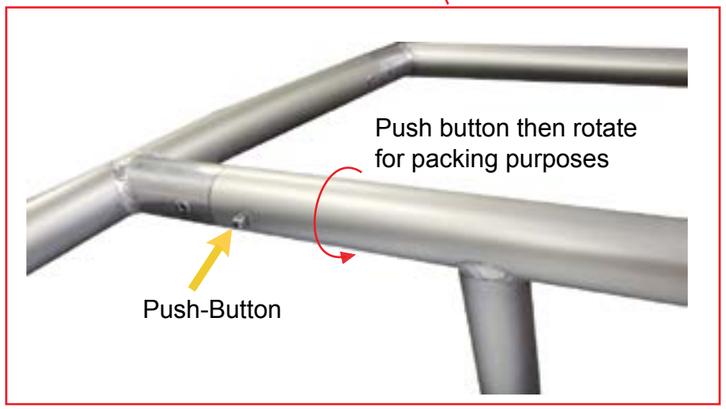

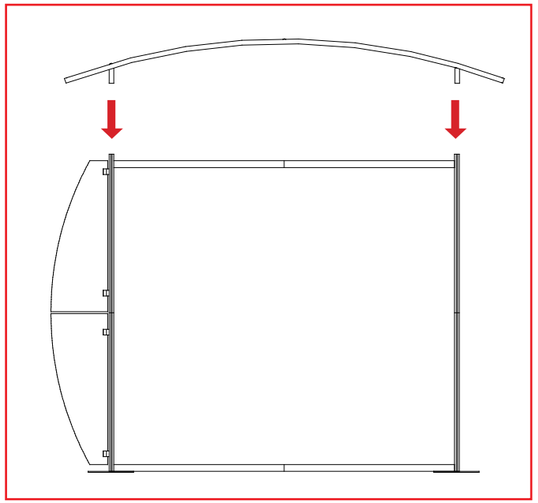

WHEN DISASSEMBLING ALUMINUM EXTRUSION, TIGHTEN ALL SETSCREWS AND LOCKS TO PREVENT LOSS DURING SHIPPING

© 2011

866.652.2100

Steps:
1) Attach lights to backwall where indicated.
2) Attach canopy to canopy mounts.
3) Attach header ro backwall using stand-off barrels and screw caps.
4) Attach wings to backwall with A10 clamps.

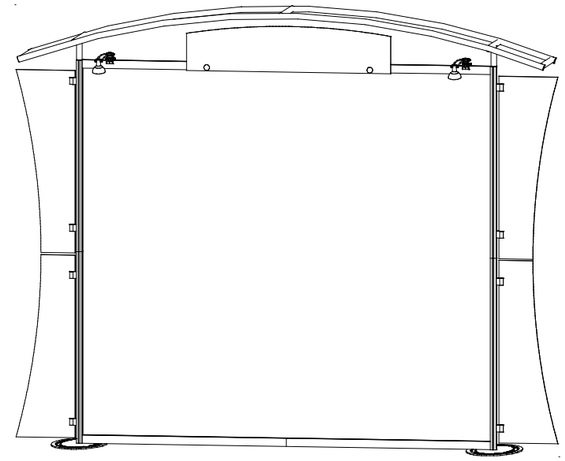

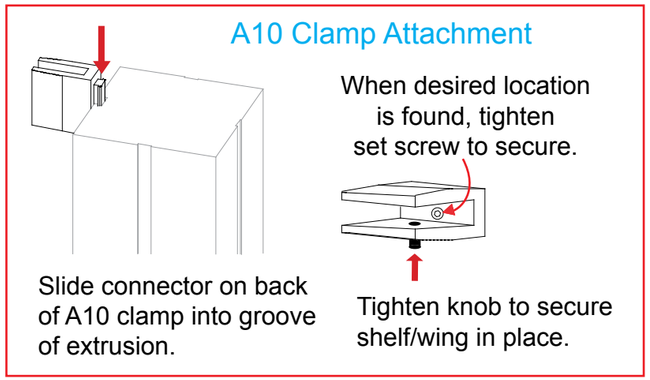

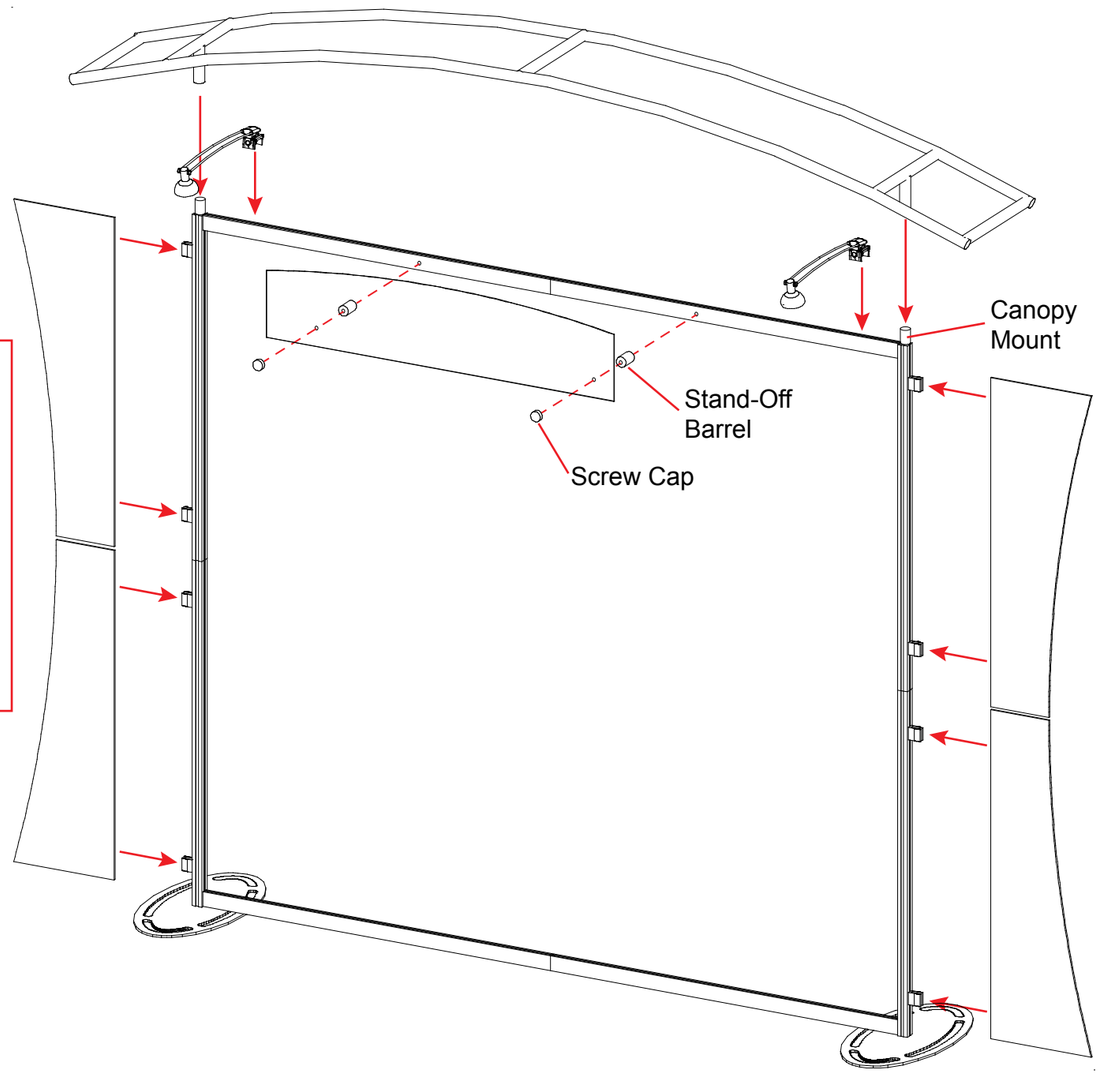

WHEN DISASSEMBLING ALUMINUM EXTRUSION, TIGHTEN ALL SETSCREWS AND LOCKS TO PREVENT LOSS DURING SHIPPING

© 2011

866.652.2100

Item Number	Description
1	23”w x 38”h Flat Panel
2	38”h 90° Connector
3	14.125”w x 38”h Flat Panel
4	38”h 90° Connector
5	23”w x 38”h Flat Panel w/ Door
6	38”h 90° Connector
7	14.125”w x 38”h Flat Panel
8	38”h 90° Connector

Steps:
1) Connect panels together in numerical order as shown in illustrations.
2) Attach shelf supports to velcro inside the assembled base.
3) Set shelf on supports.
4) Set counter atop assembled pedestal.

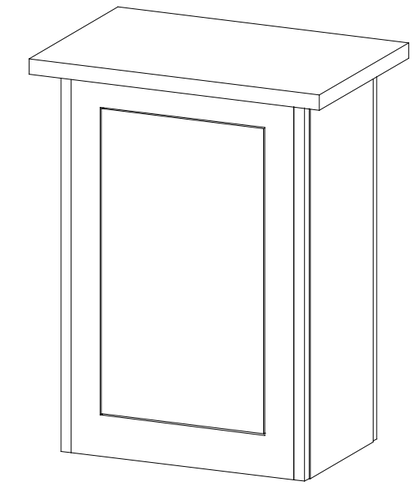

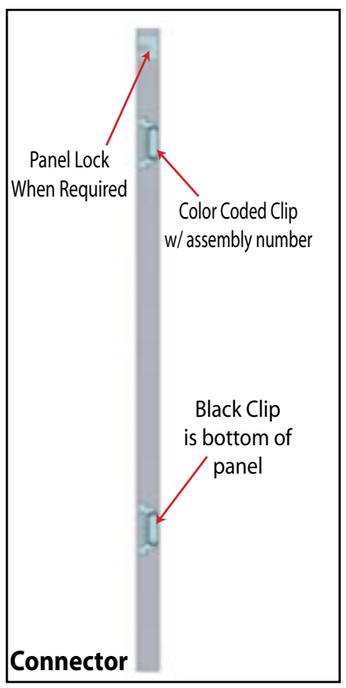

Each component has 2 clips, the lower clip is ALWAYS black. .

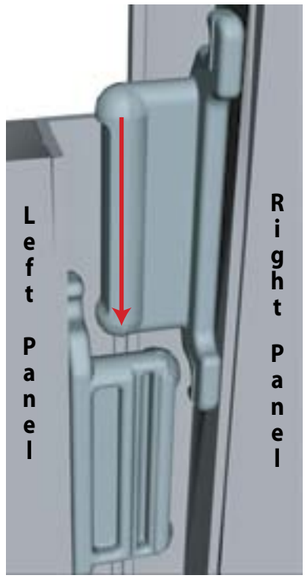

Cut Away View Of Slide Clips

Components connect together by aligning them and sliding downward connecting clips together.

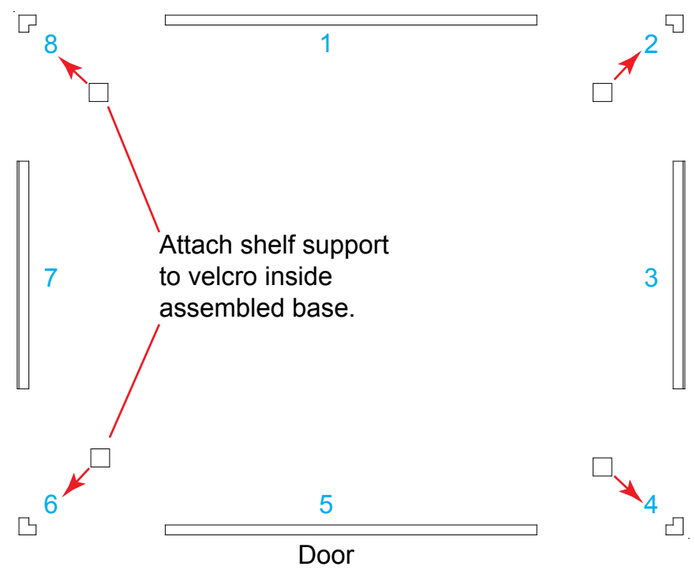

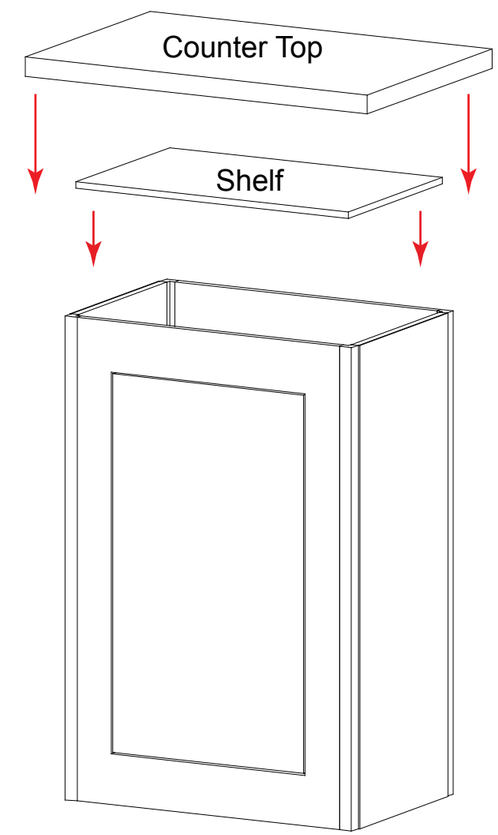

WHEN DISASSEMBLING ALUMINUM EXTRUSION, TIGHTEN ALL SETSCREWS AND LOCKS TO PREVENT LOSS DURING SHIPPING

© 2011

866.652.2100

Backwall Packing

Top View

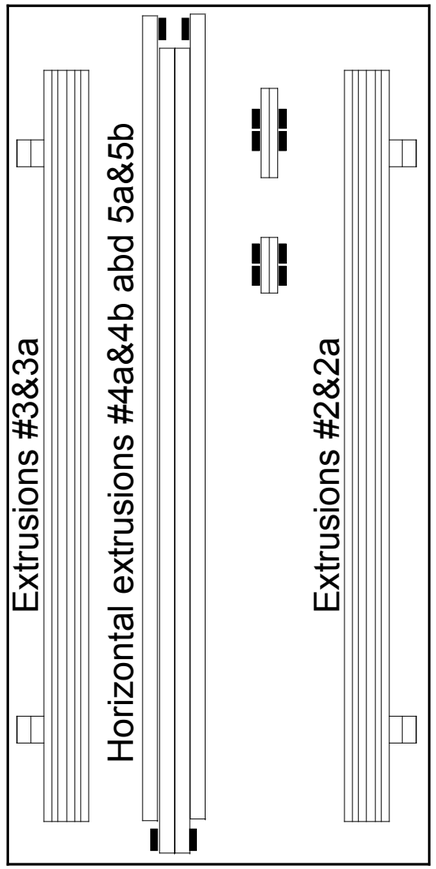

WHEN DISASSEMBLING ALUMINUM EXTRUSION, TIGHTEN ALL SETSCREWS AND LOCKS TO PREVENT LOSS DURING SHIPPING

© 2011

866.652.2100

Pedestal Packing

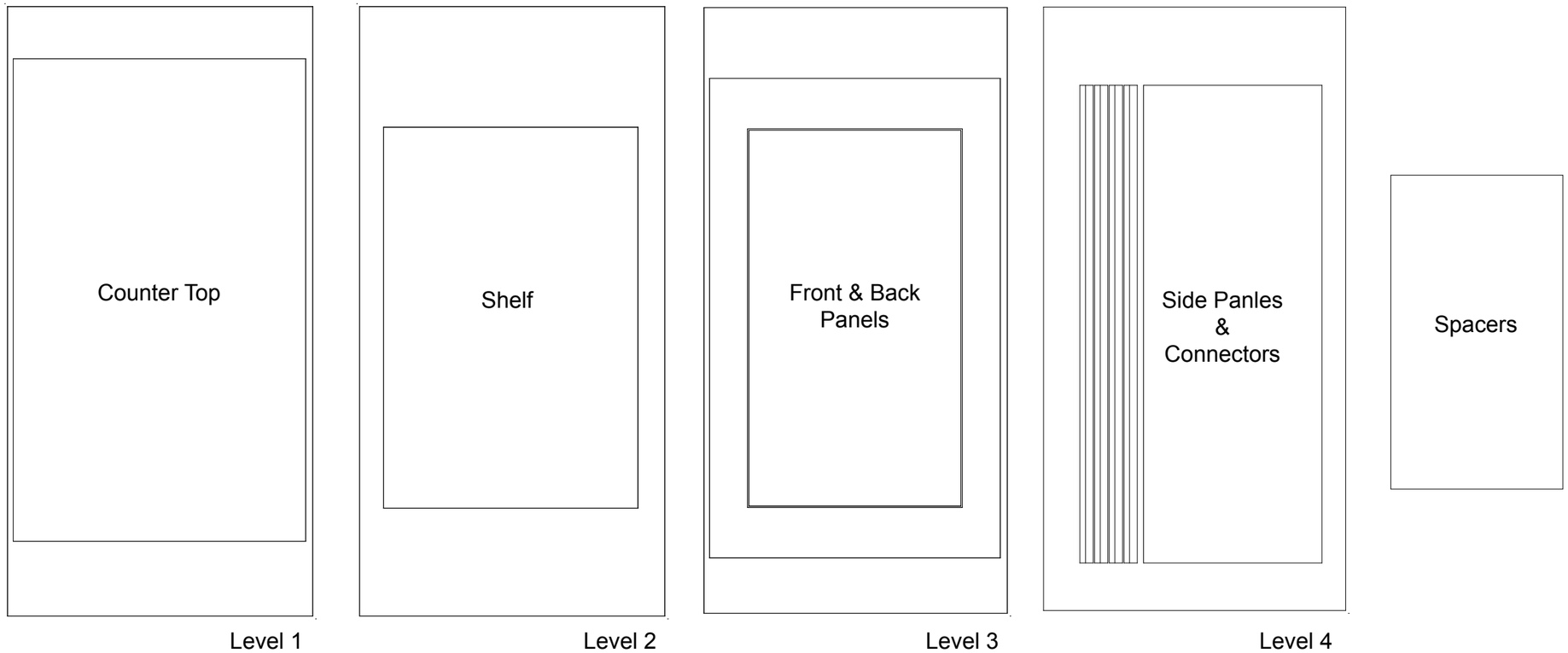

WHEN DISASSEMBLING ALUMINUM EXTRUSION, TIGHTEN ALL SETSCREWS AND LOCKS TO PREVENT LOSS DURING SHIPPING

© 2011